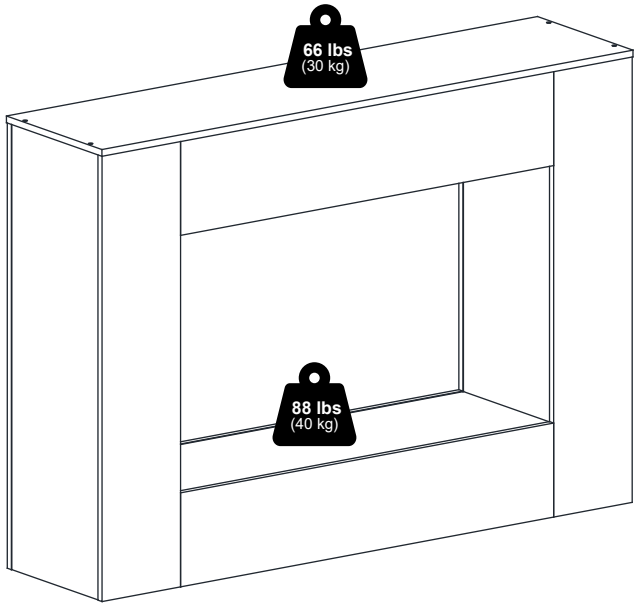





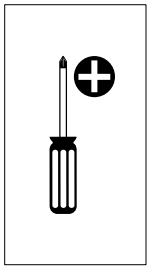

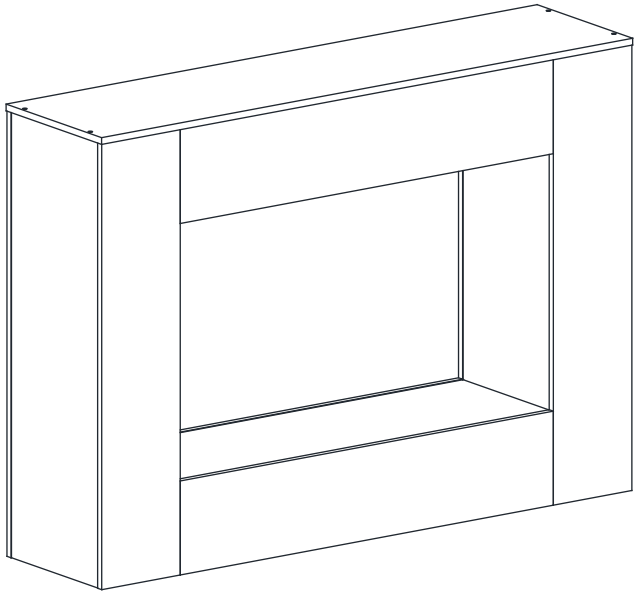

MODEL: 26043

2604320260731

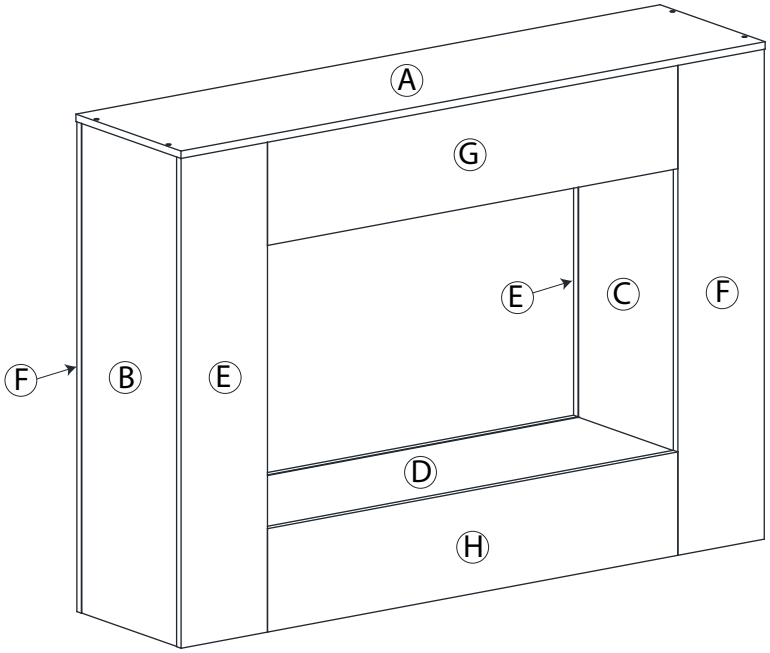

1 x 46 	2 x 46 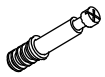	3 x 32 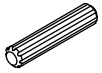 M5 x 30mm	4 x 1  M4
5 x 4  M4 x 32mm	6 x 4 		

7

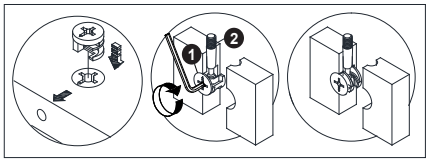

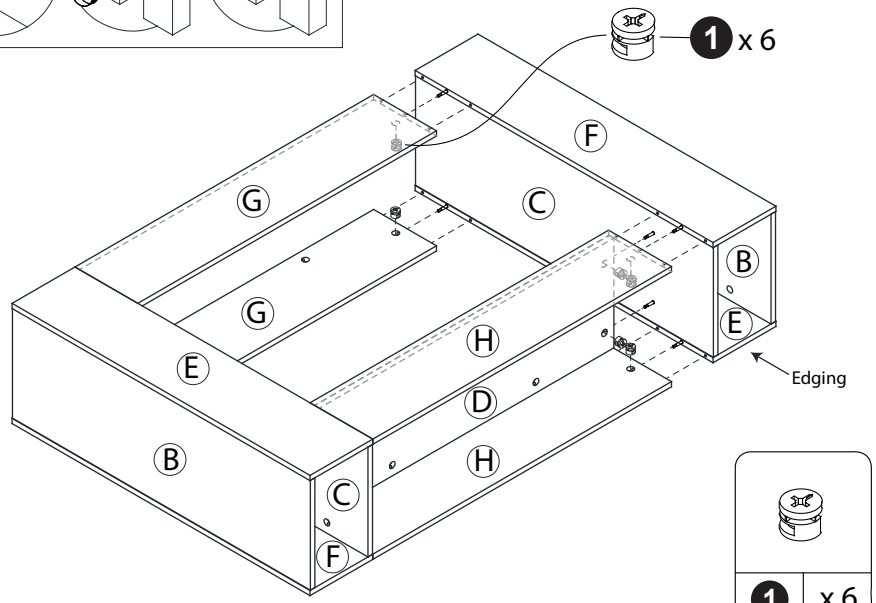

8

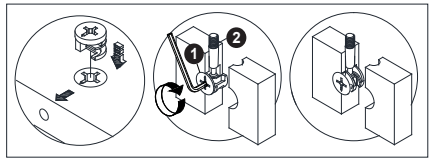

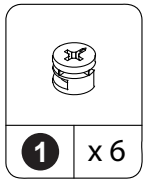

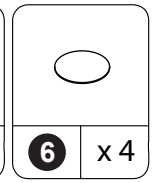

5

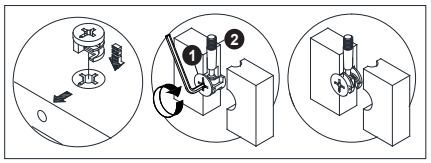

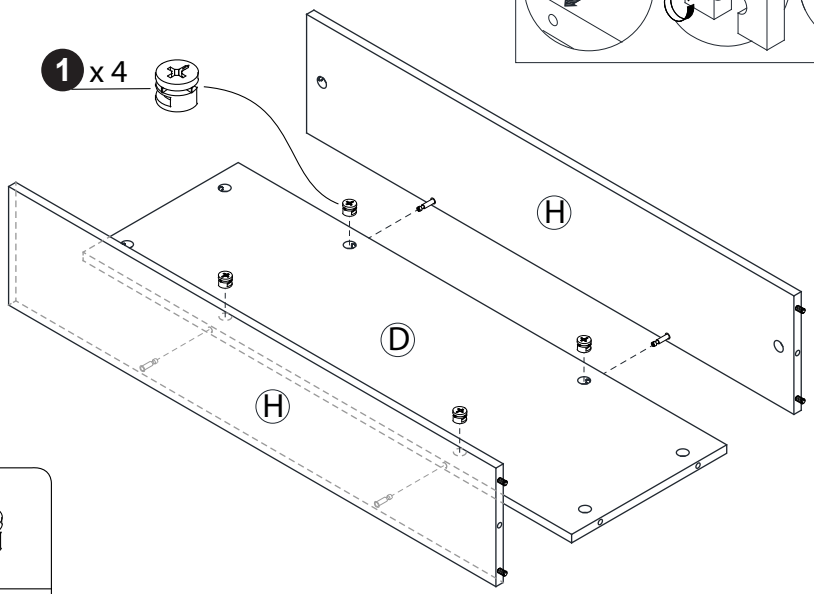

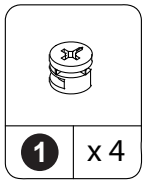

6

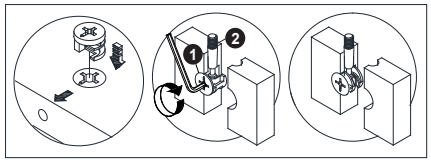

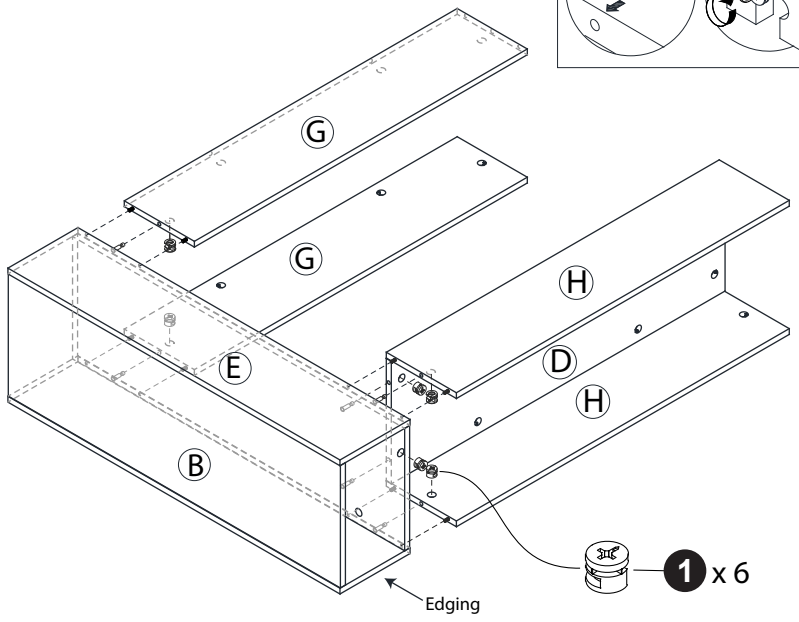

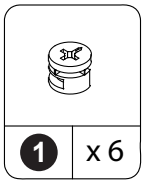

1

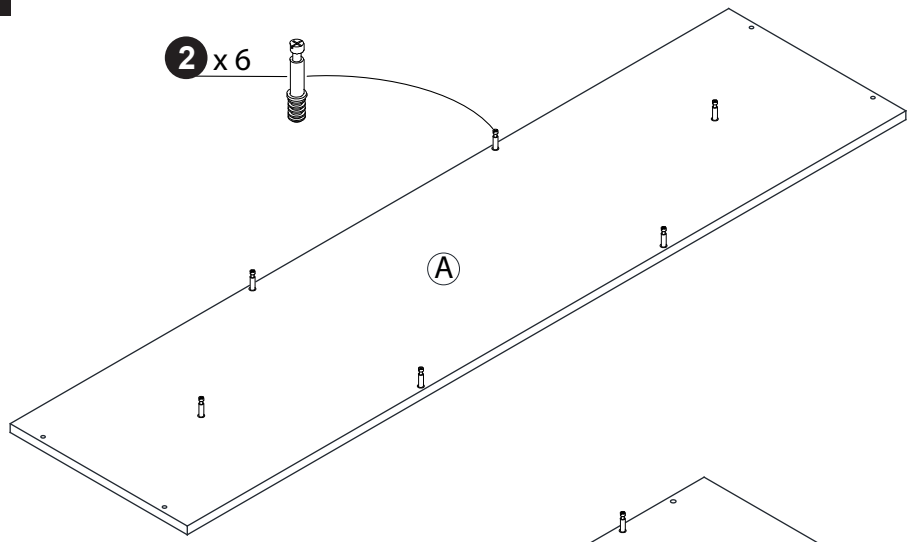

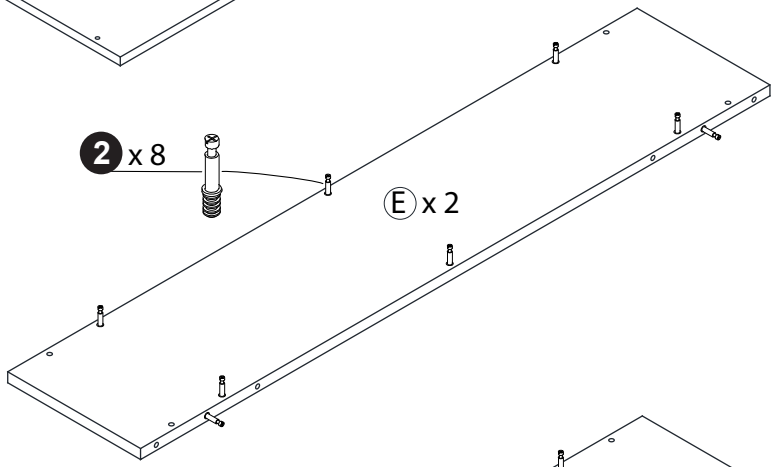

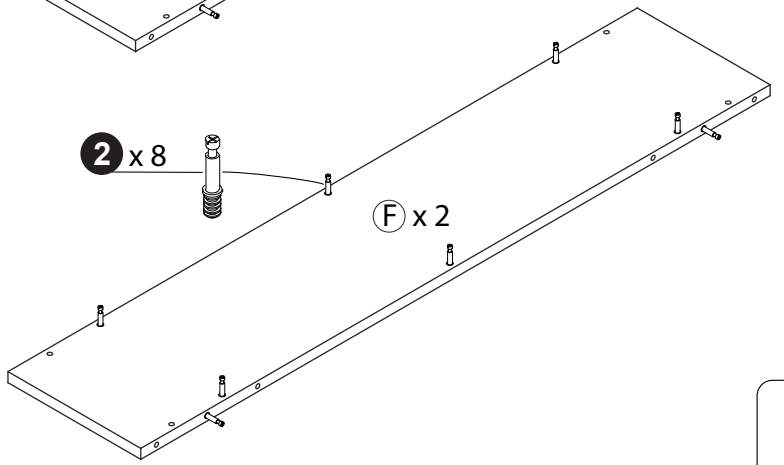

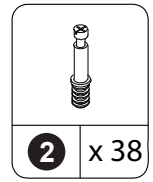

2

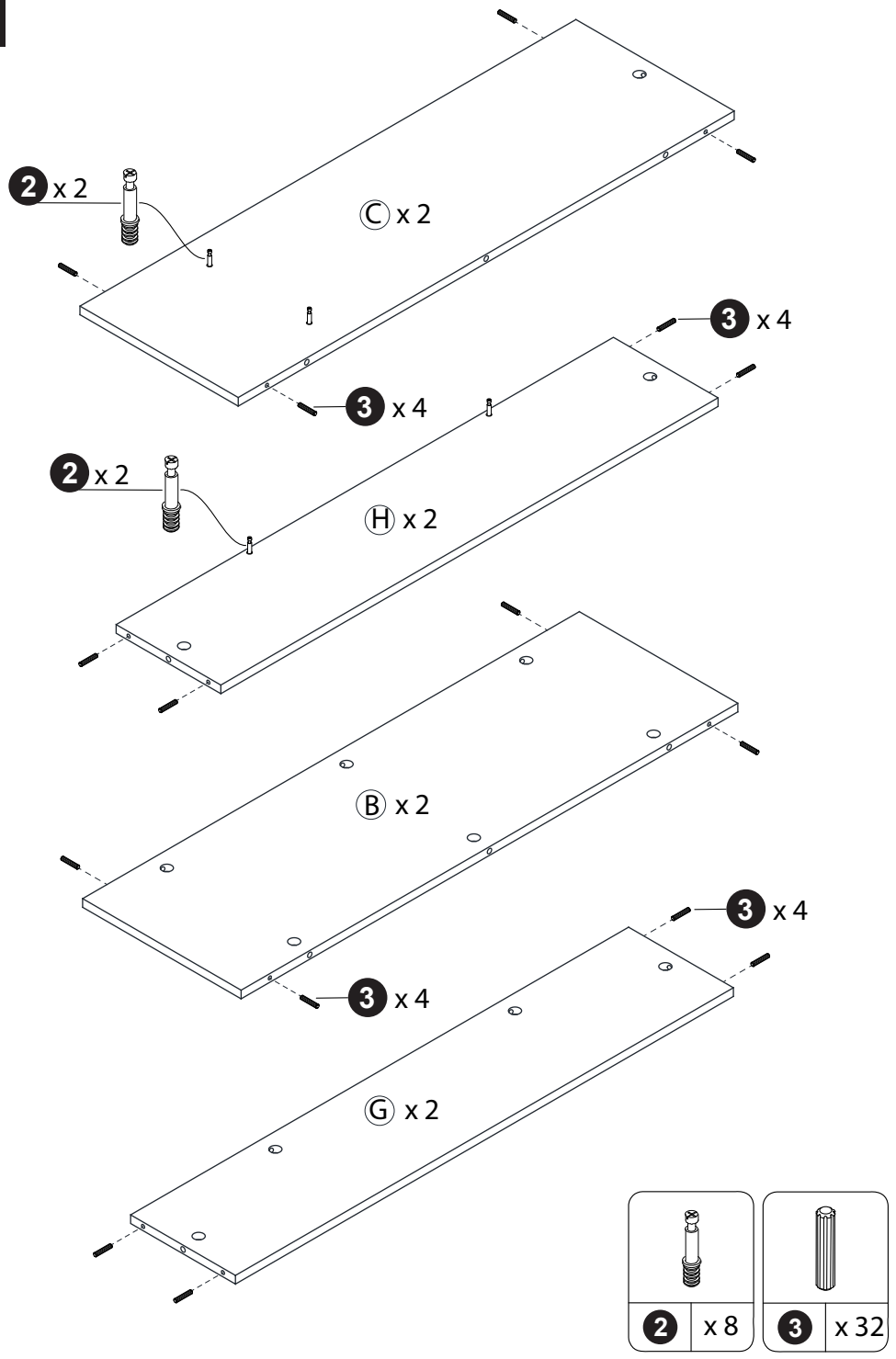
2 x 2
Ⓒ x 2
3 x 4
3 x 4
2 x 2
Ⓗ x 2
Ⓑ x 2
3 x 4
3 x 4
Ⓖ x 2
2 x 8
3 x 32

3

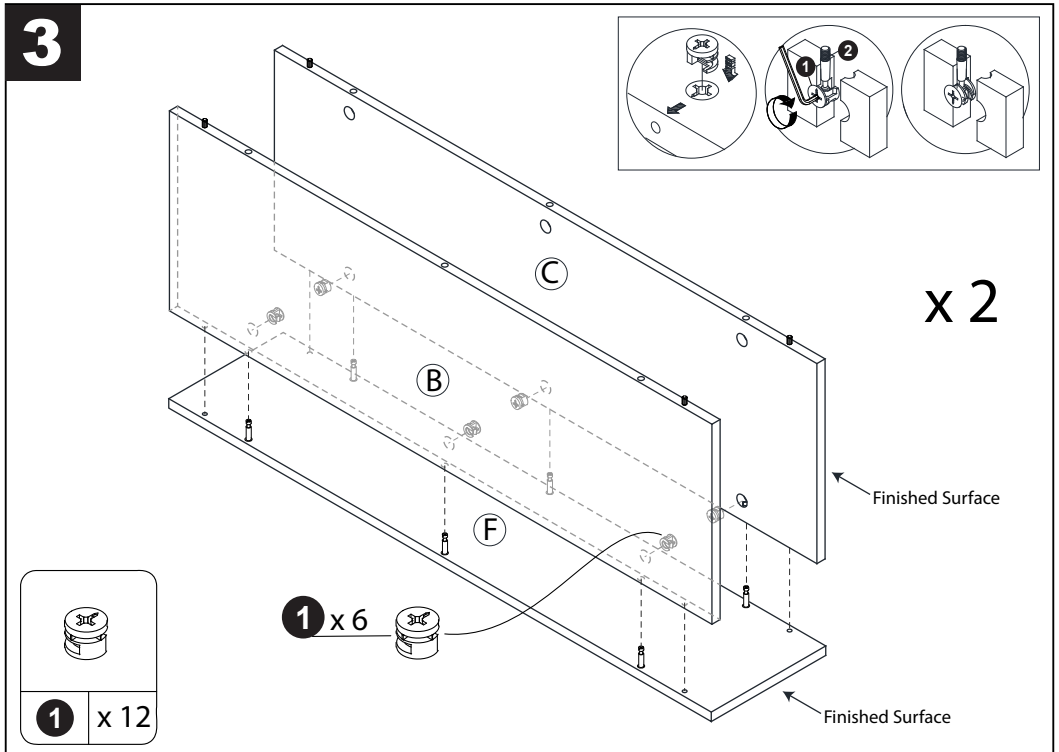
Ⓒ
x 2
Ⓑ
Ⓕ
Finished Surface
1 x 6
Finished Surface
1 x 12

4

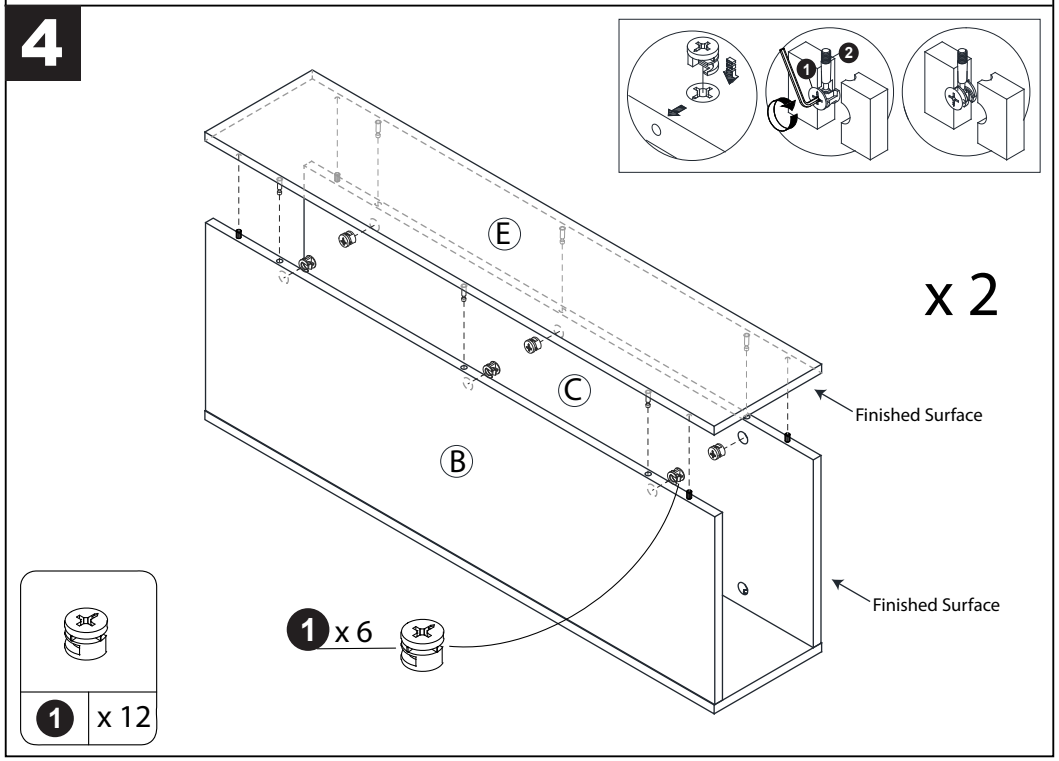
Ⓔ
x 2
Ⓒ
Finished Surface
Ⓑ
Finished Surface
1 x 6
1 x 12