# 19

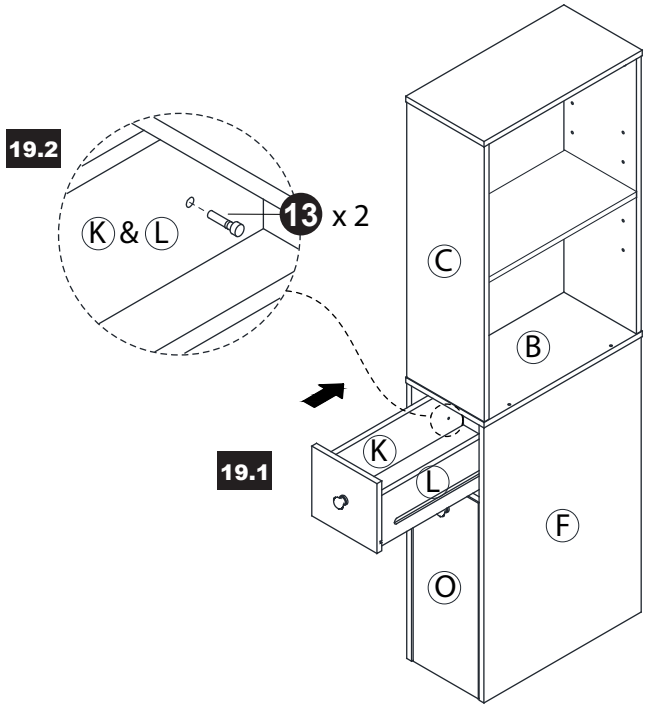


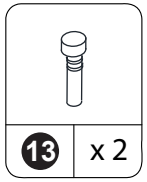


THIS PRODUCT MUST ALWAYS BE MOUNTED A WALL OR STUD FOR USE.

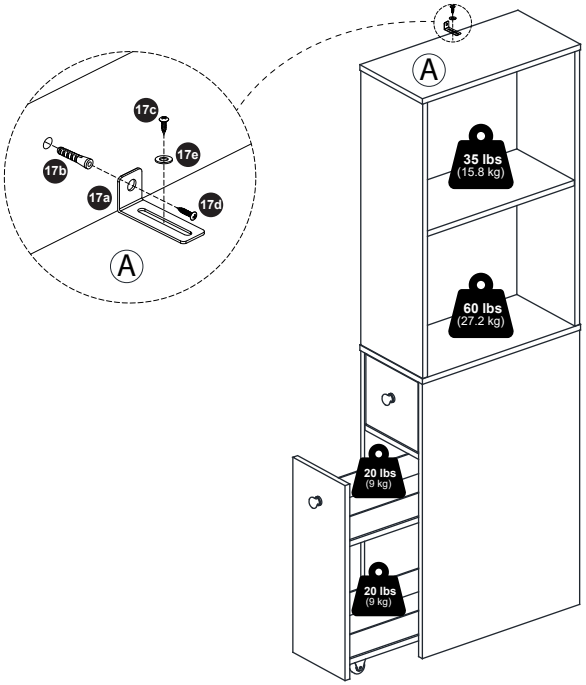


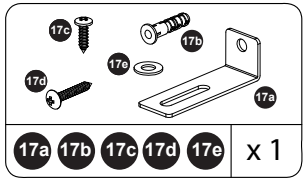







**OPTION 1:**
**LEFT**

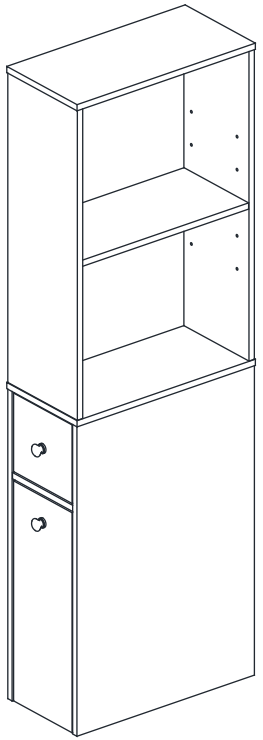

**OPTION 2:**
**RIGHT**

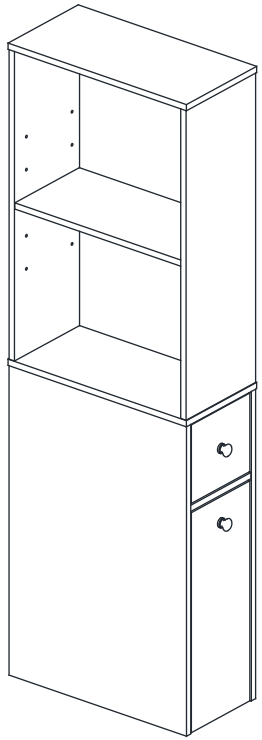

THIS PRODUCT MUST ALWAYS BE MOUNTED A WALL OR STUD FOR USE.

## MODEL: 26053



2605320260611

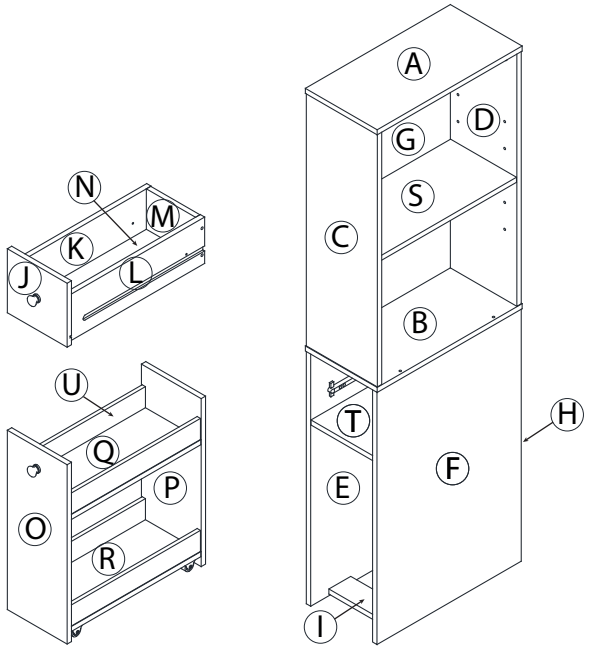


| | | | |
|---|---|---|---|
| 1 x 38 | 2 x 38 | 3 x 18<br>M5 x 30mm | 4 x 4 |
| 5 x 6<br>M5 x 40mm | 6 x 12<br>M4 x 32mm | 7 x 4 | 8 x 8<br>M4 x 12mm |
| 9 x 2 | 10 x 2<br>M3.6 x 19mm | 11 x 4 | 12 x 2 |
| 13 x 2 | 14 x 6<br>M4 x 16mm | 15 x 2 | 16 x 1<br>M4 |
| 17 x 1 | | | |



## 17

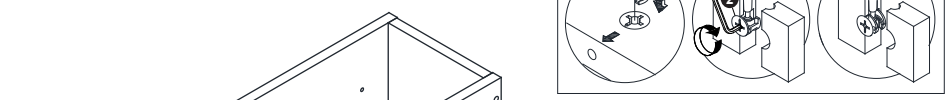




| | |
|---|---|
| 1 | x 4 |
| 9 | x 1 |
| 10 | x 1 |

## 18

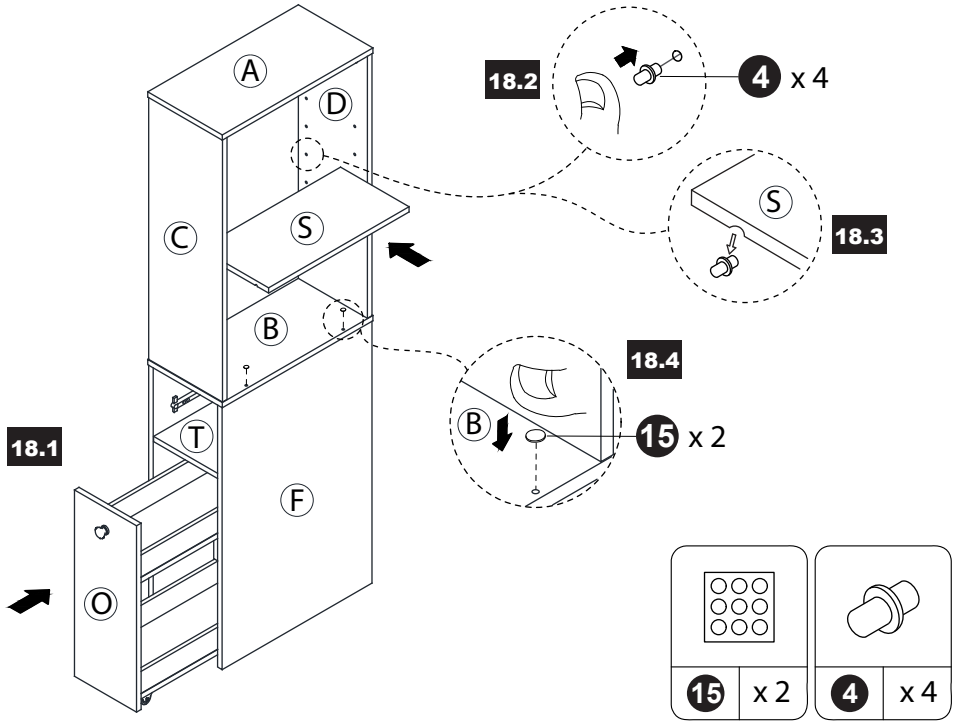


| | |
|---|---|
| 15 | x 2 |
| 4 | x 4 |

## 15

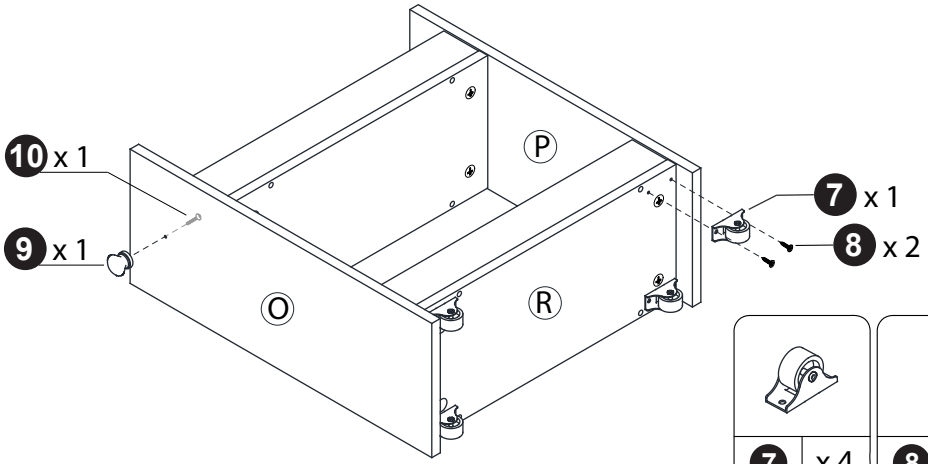


| | |
|---|---|
| 7 x 4 | 8 x 8 |
| 9 x 1 | 10 x 1 |

## 16

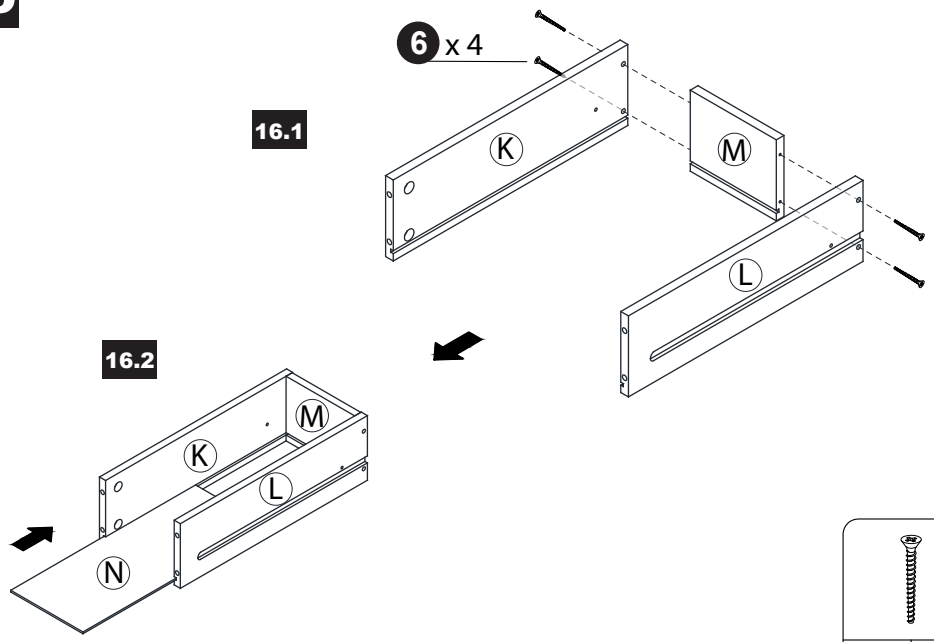


| |
|---|
| 6 x 4 |



## 1

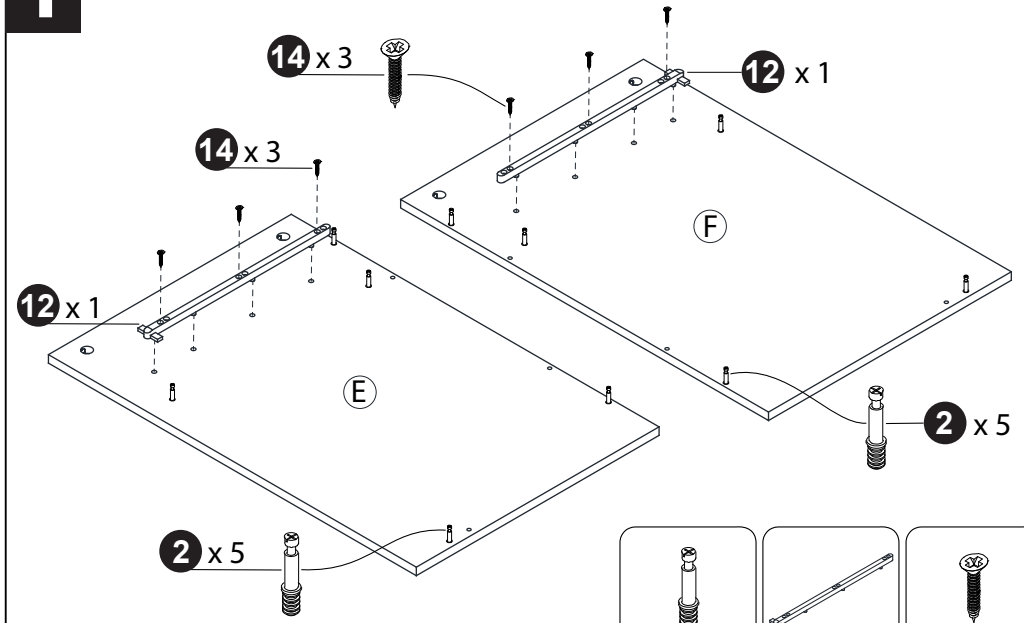


| | | |
|---|---|---|
| 2 x 10 | 12 x 2 | 14 x 6 |

## 2

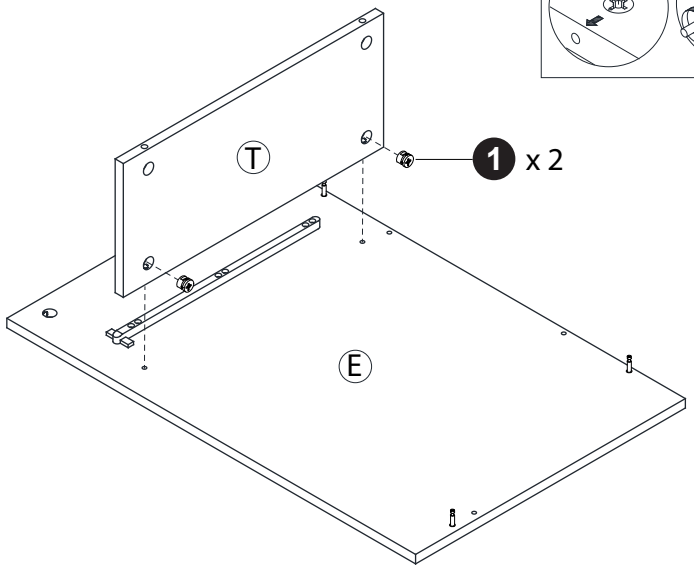


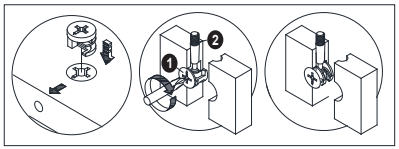


| |
|---|
| 1 x 2 |

## 3

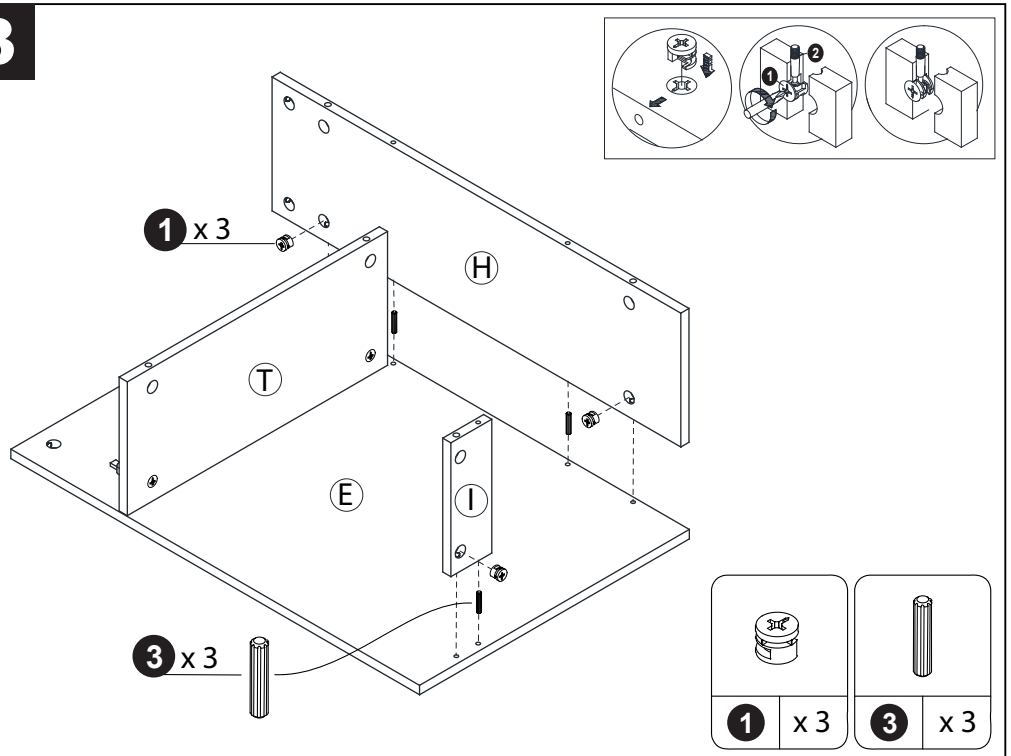
1 x 3
H
T
E
I
3 x 3


1 x 3
3 x 3

## 4

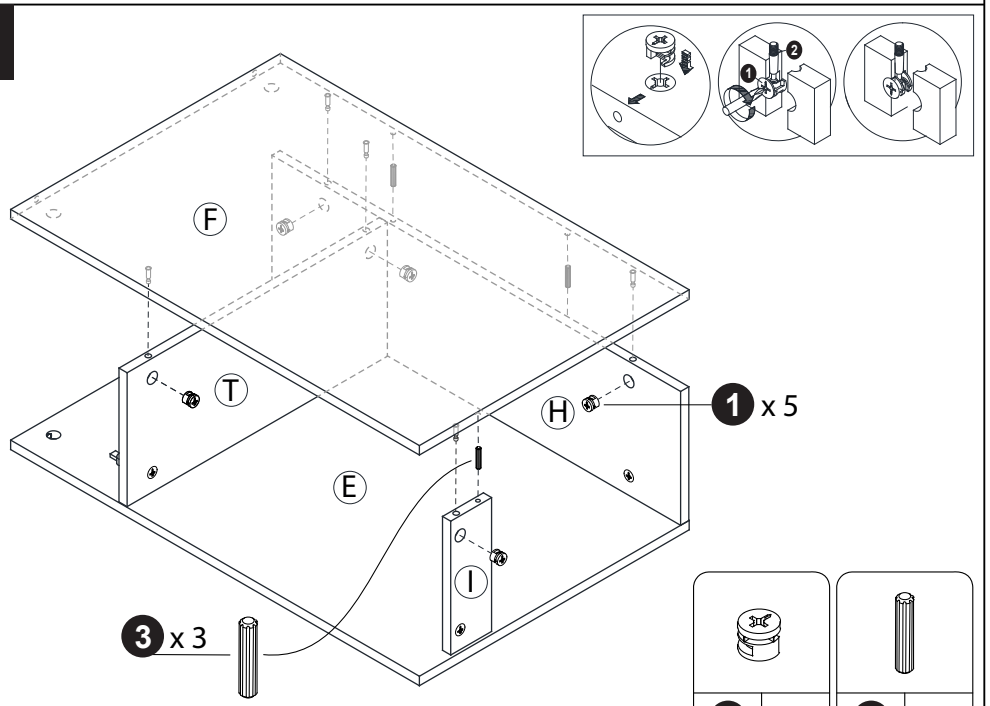
F
T
H
1 x 5
E
I
3 x 3


1 x 5
3 x 3



## 13

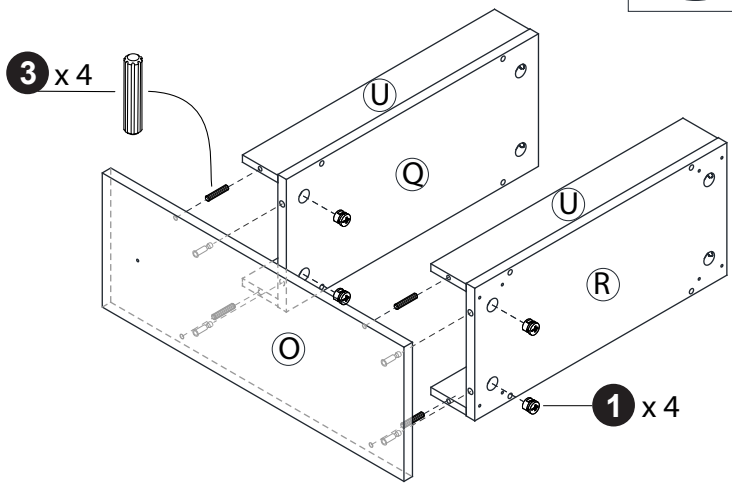
3 x 4
U
Q
U
R
O
1 x 4

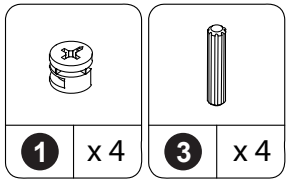
1 x 4
3 x 4

## 14

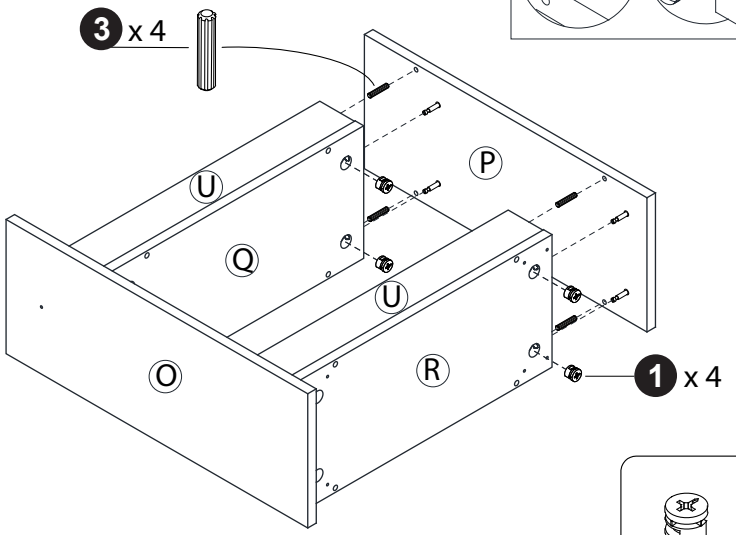
3 x 4
U
P
Q
U
O
R
1 x 4

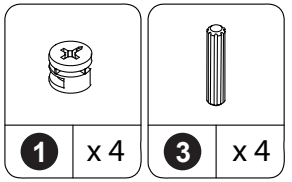
1 x 4
3 x 4

## 11

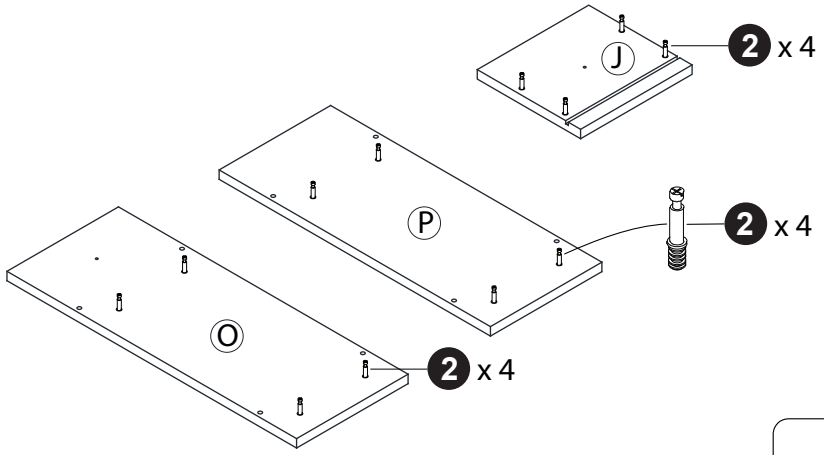
J
2 x 4
P
2 x 4
O
2 x 4

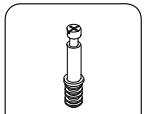
2 x 12

## 12

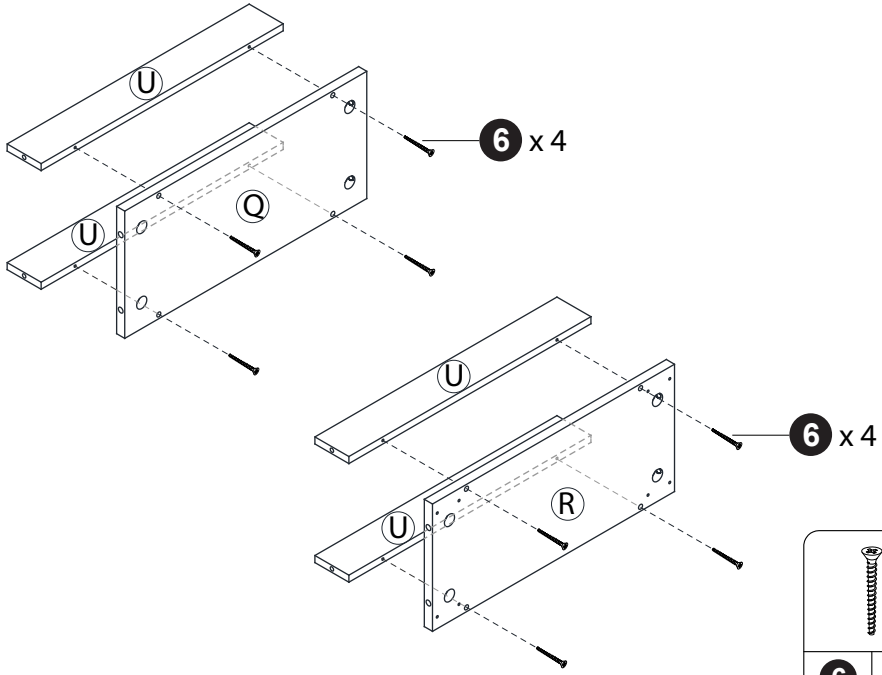
U
U
Q
6 x 4
U
U
R
6 x 4


6 x 8



## 5

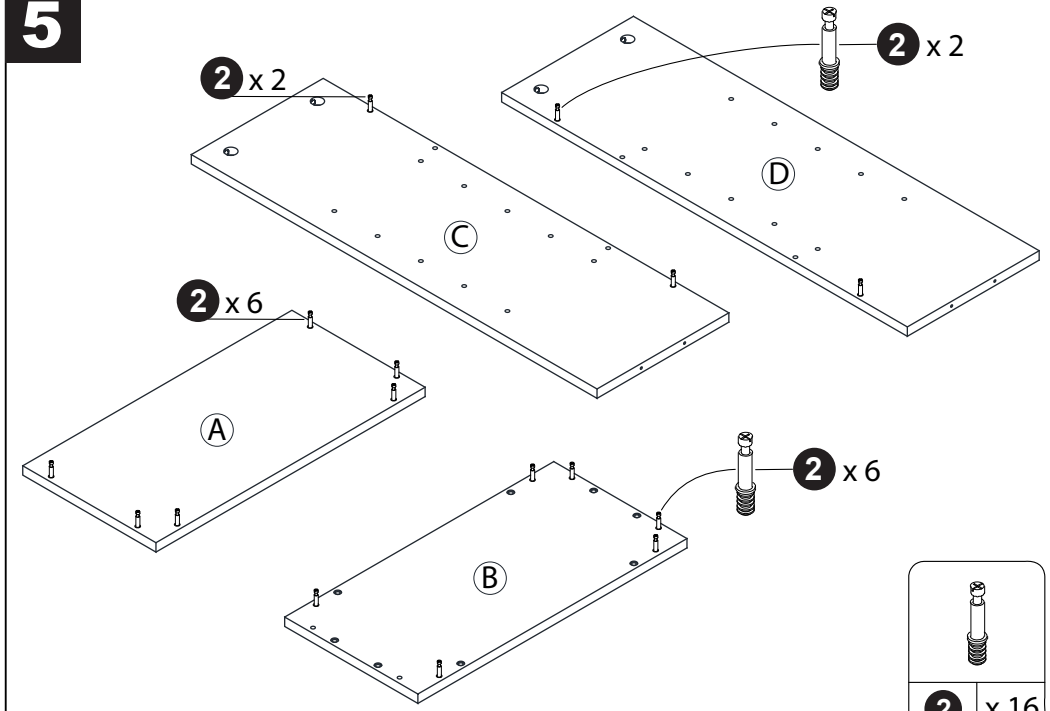
2 x 2
2 x 2
C
D
2 x 6
A
2 x 6
B


2 x 16

## 6

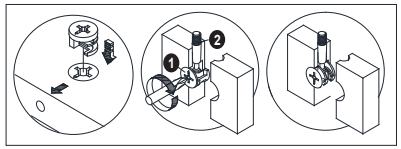

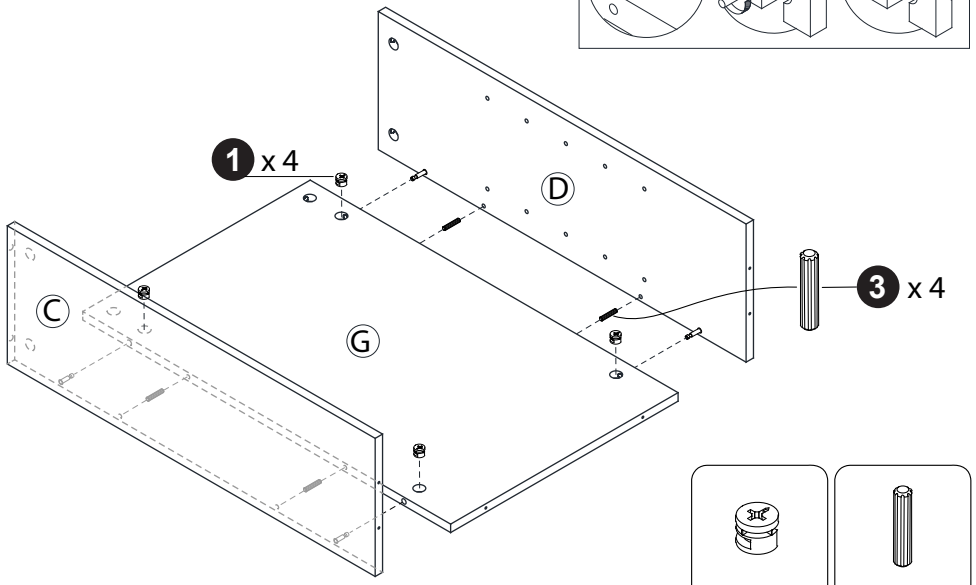
1 x 4
D
3 x 4
C
G


1 x 4
3 x 4

## 7

**OPTION 1:**

**LEFT** **(Step 7 & 8)**

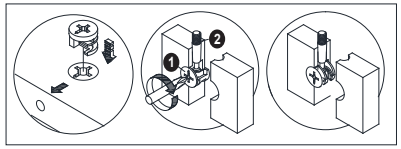

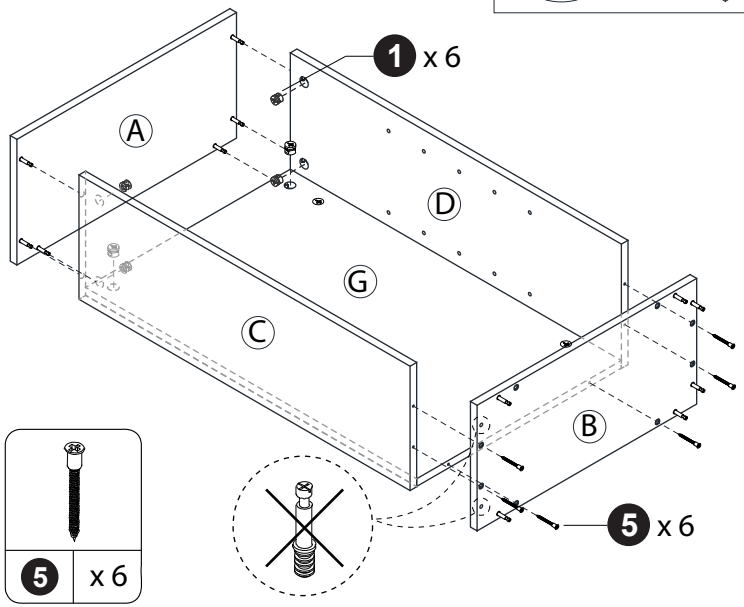


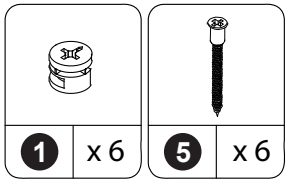


## 8

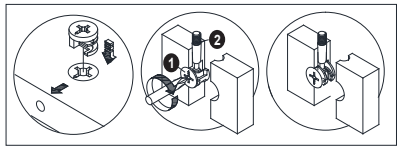

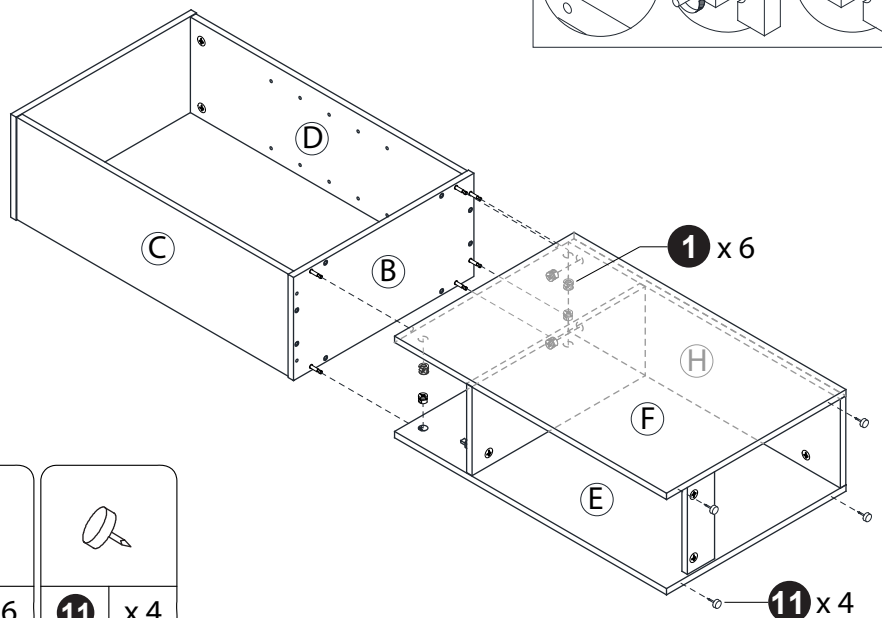







## 9

**OPTION 2:**

**RIGHT** **(Step 9 & 10)**

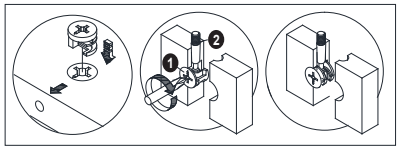

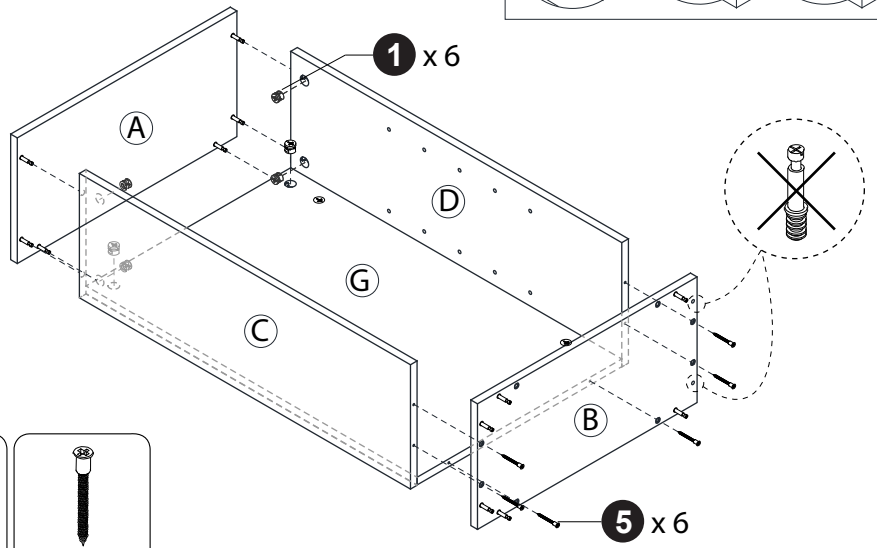


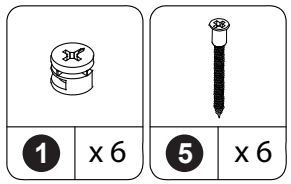


## 10

