



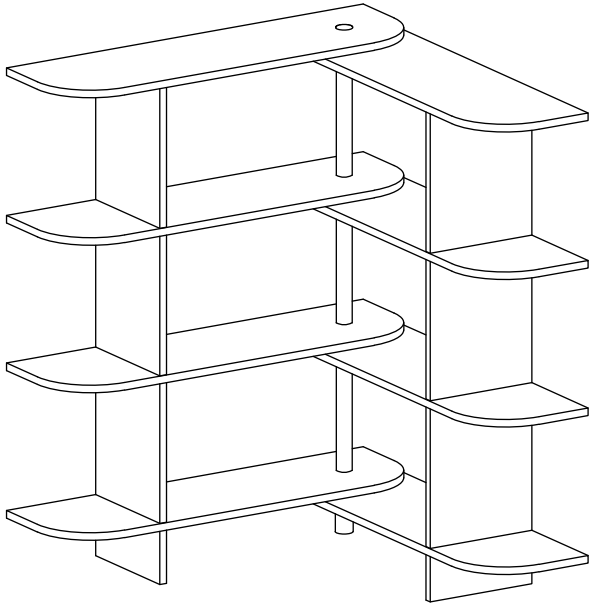

THIS PRODUCT MUST ALWAYS BE MOUNTED A WALL OR STUD FOR USE.

MODEL: 26058

2605820260525

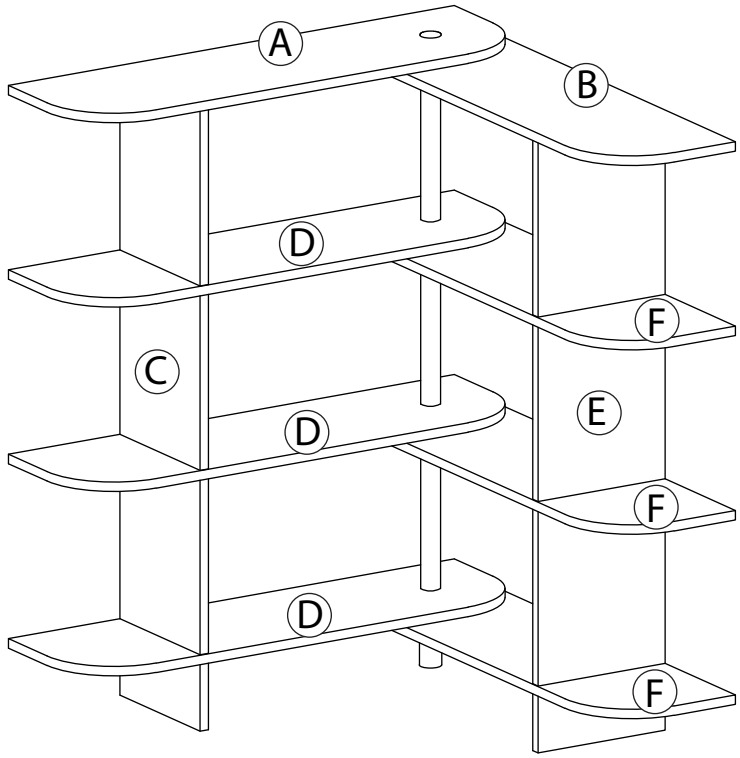

1 x 4	2 x 4	3 x 1	4 x 1
5 x 3 280mm	6 x 2		

9

wall

OPTION: 1

THIS PRODUCT MUST ALWAYS BE MOUNTED A WALL OR STUD FOR USE.

5a 6d 1¼" DRILL BIT 6c 6e 6b

wall

OPTION: 2

6d 6e 6a 6b 6c

6 x 2

7

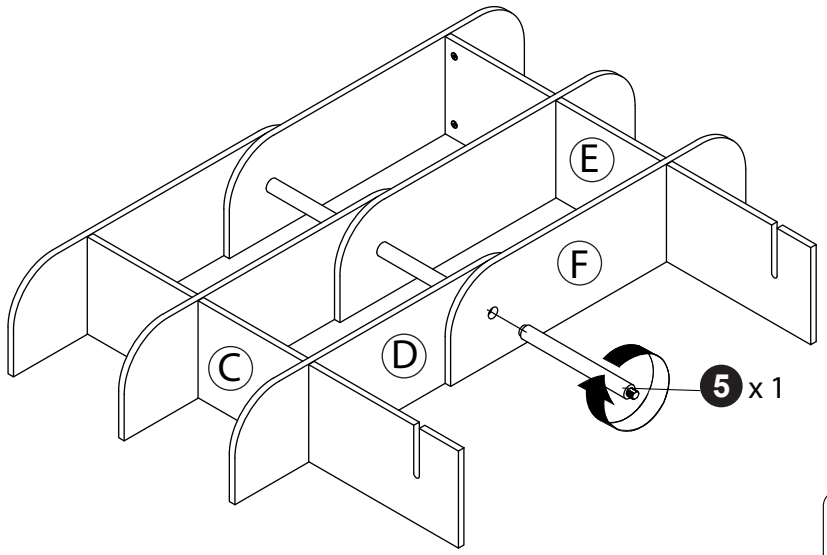

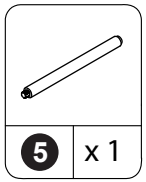

5 x 1

8

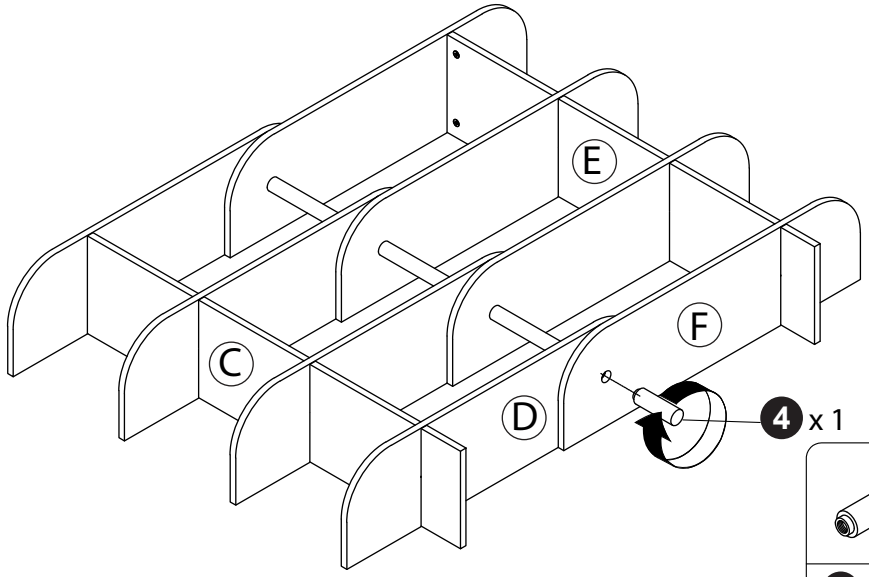

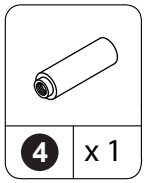

4 x 1

1

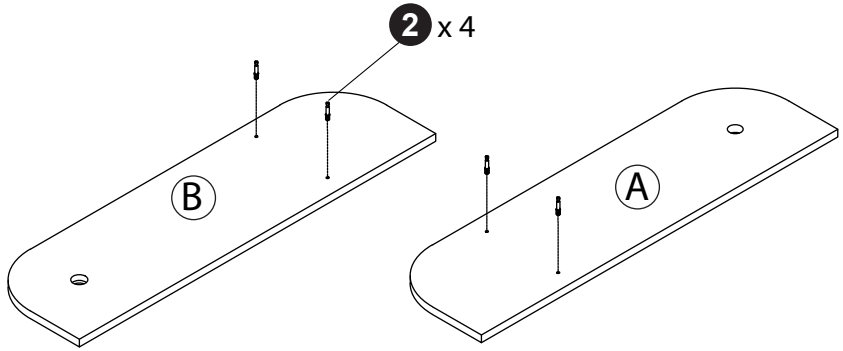

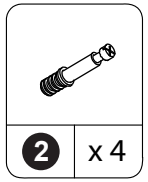

2 x 4

2

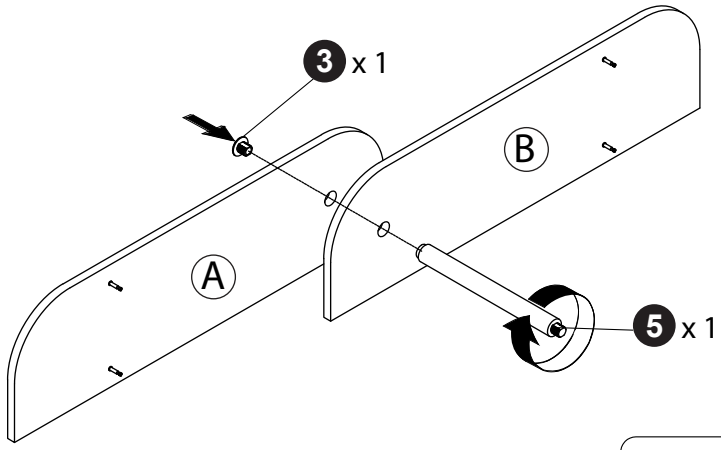

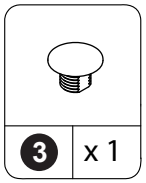

3 x 1

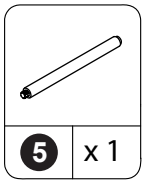

5 x 1

3

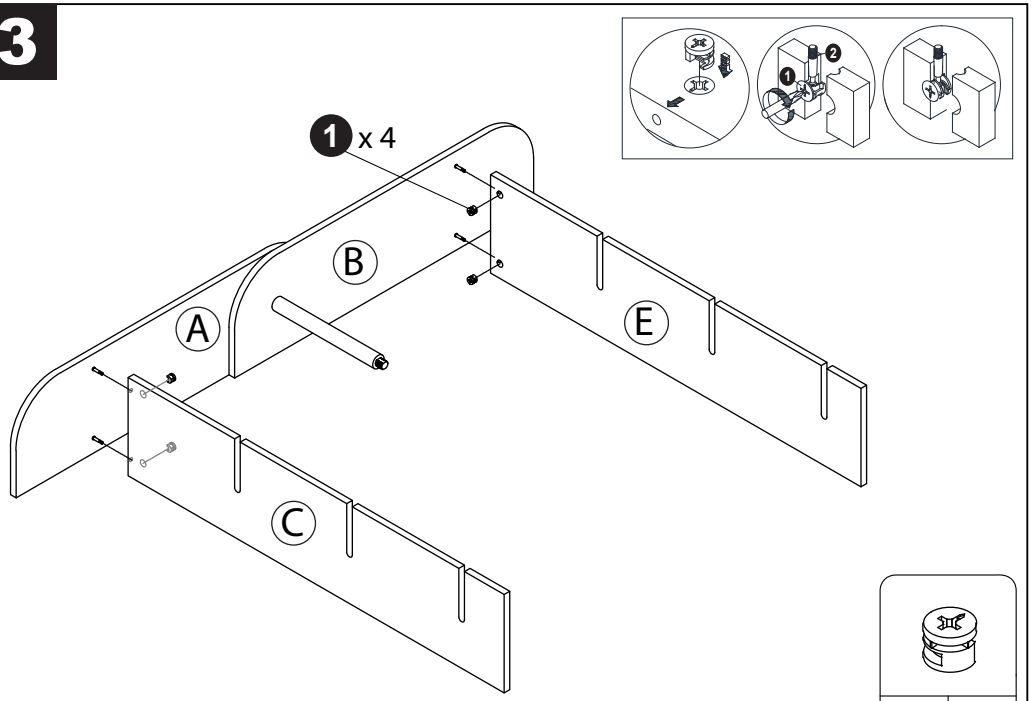

4

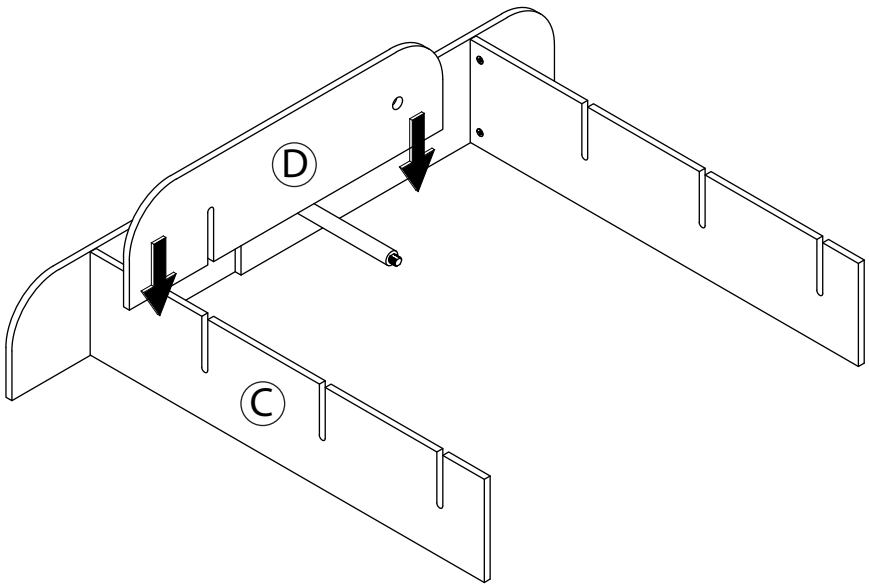

5

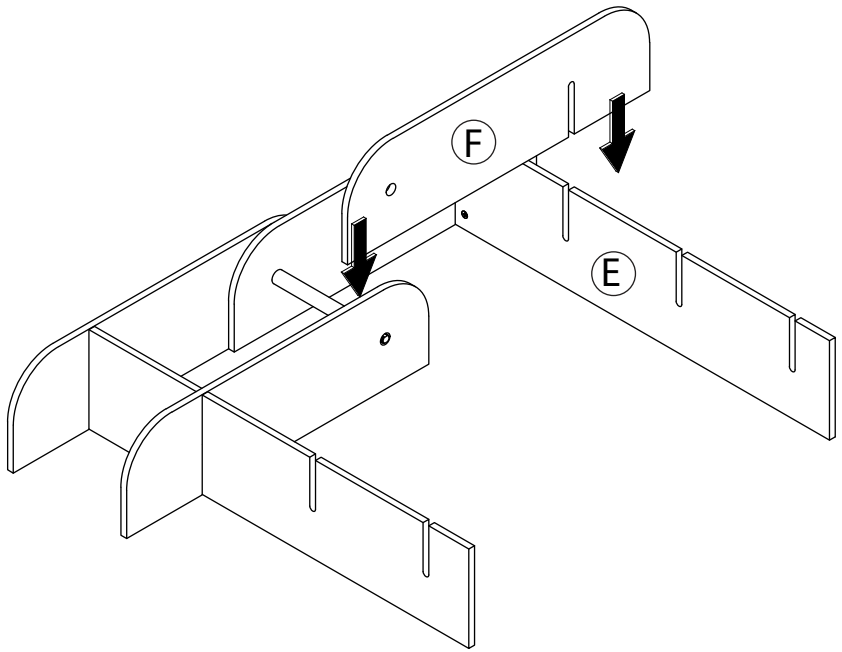

6

