

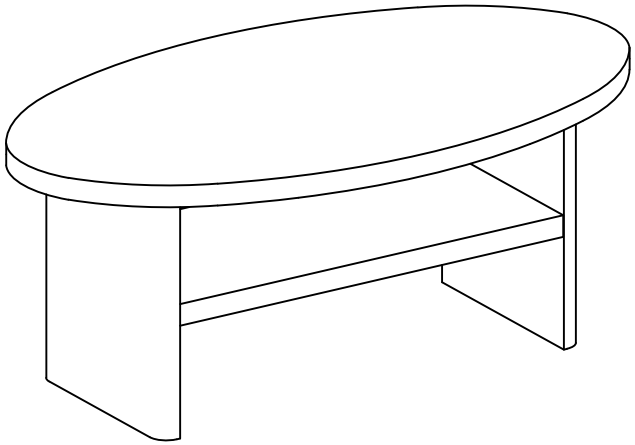

MODEL: 26063

2606320260504

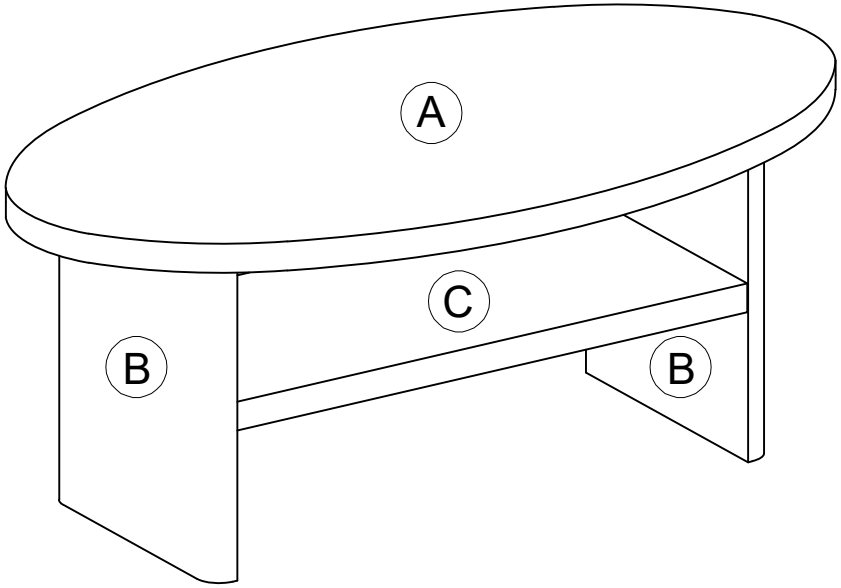

1 x 8 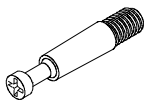	2 x 8 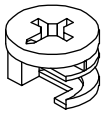	3 x 8 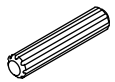 M5 x 30mm

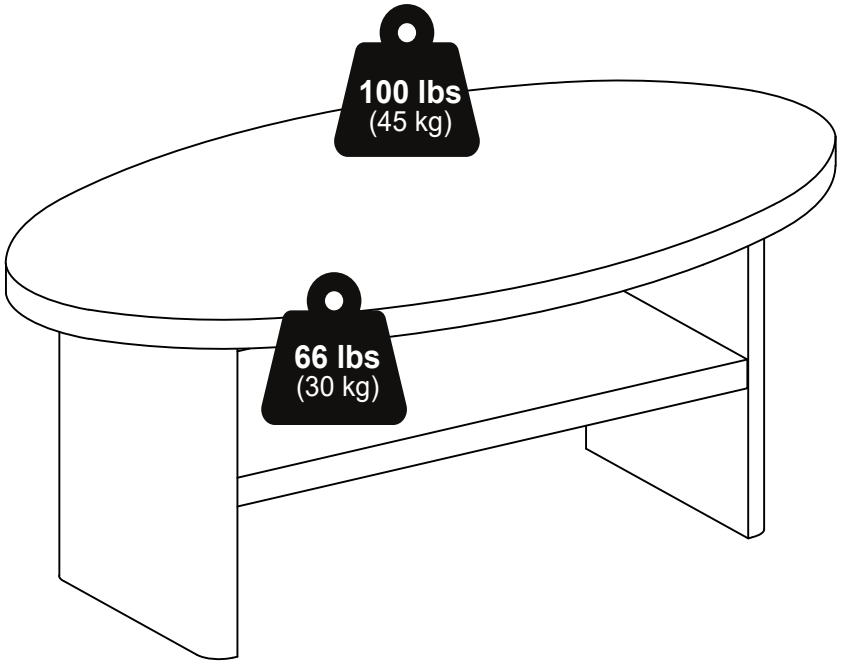



4

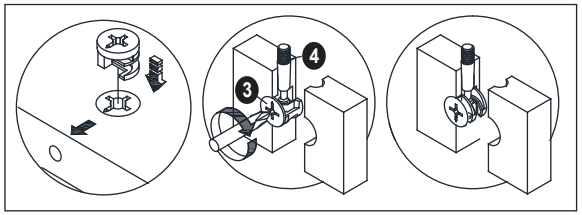

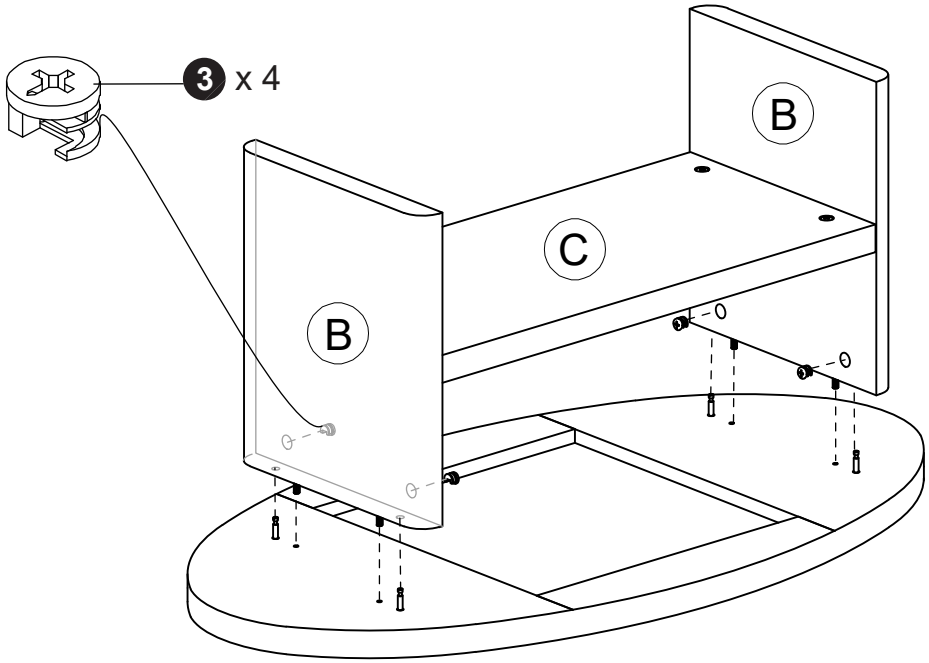

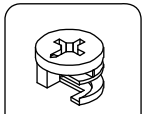

3 x 4

1

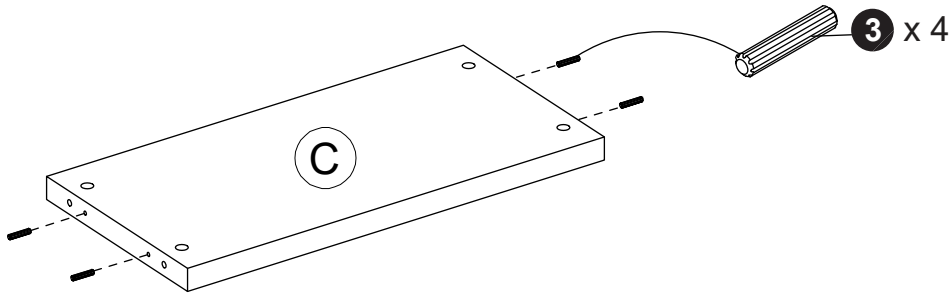

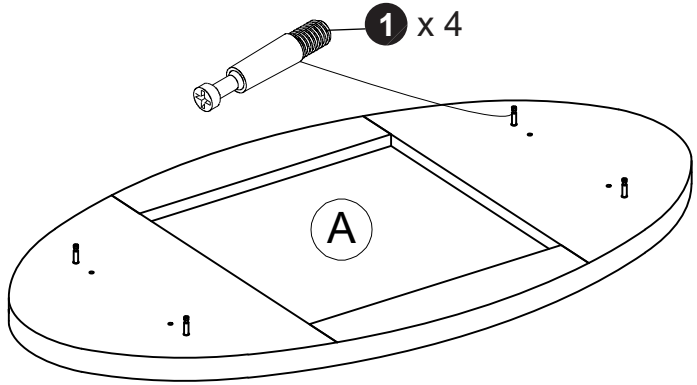

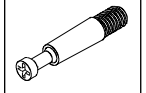

1 x 4

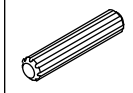

1 x 4

2

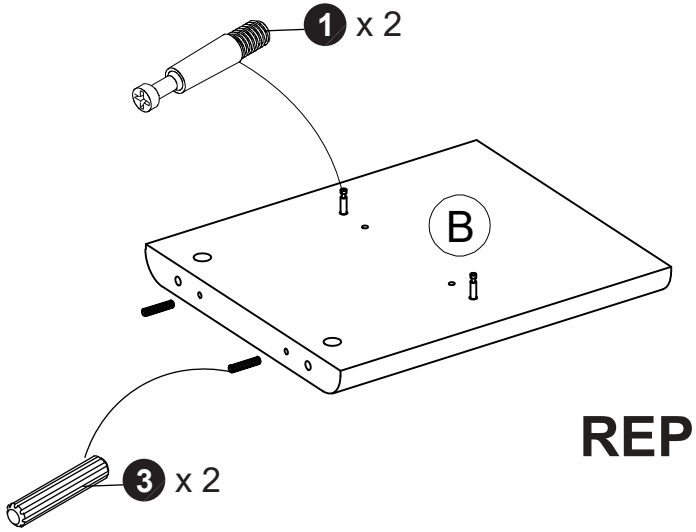

REPEAT x 2

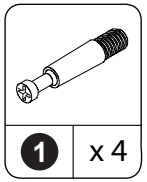

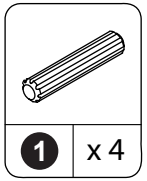

3

