4

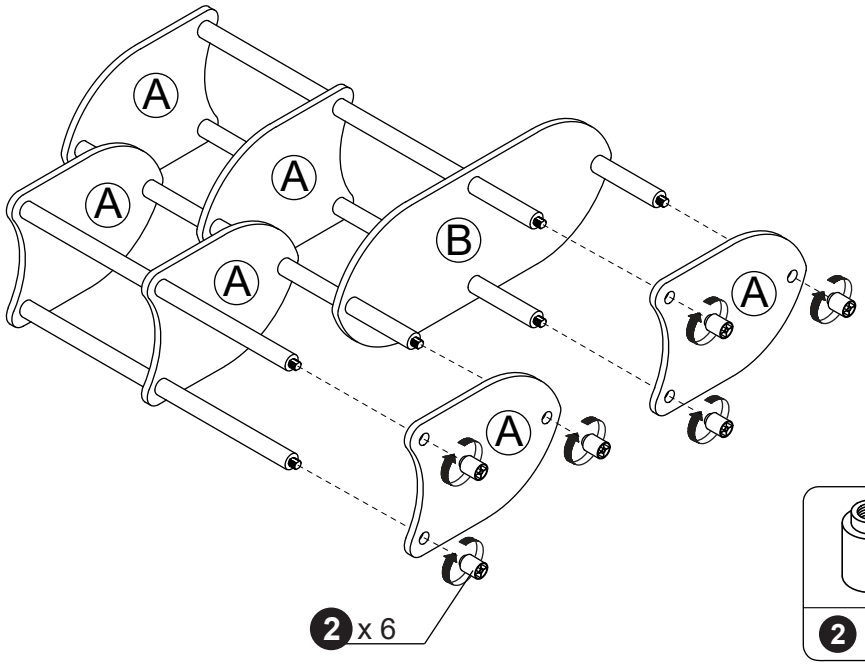

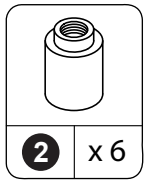

5

THIS PRODUCT MUST ALWAYS BE MOUNTED A WALL OR STUD FOR USE.

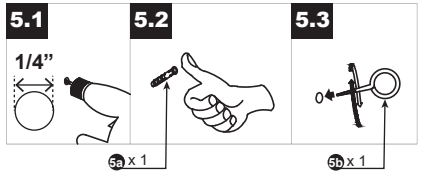

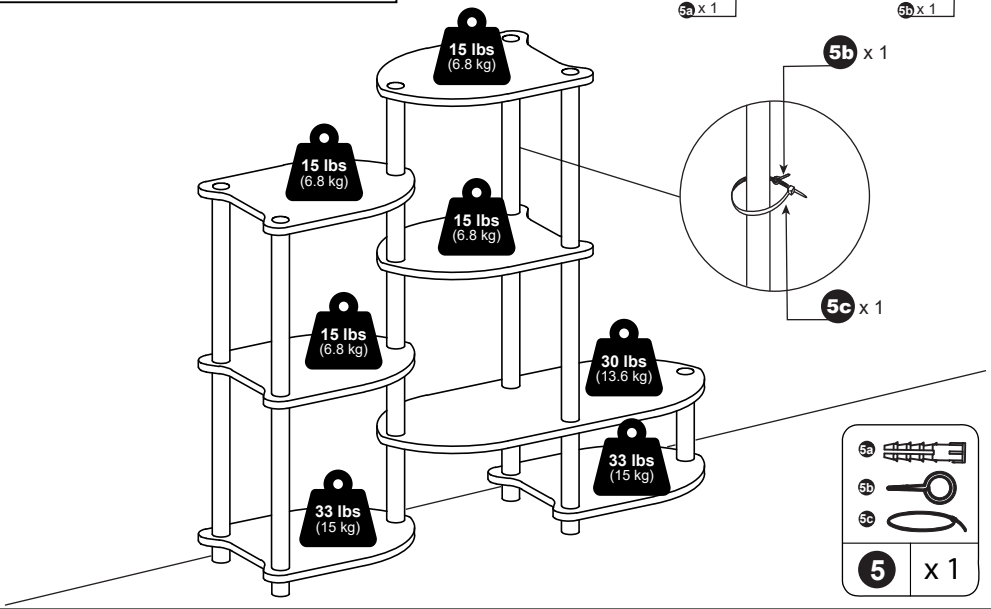





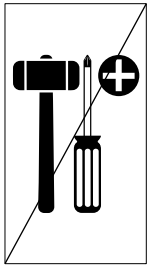

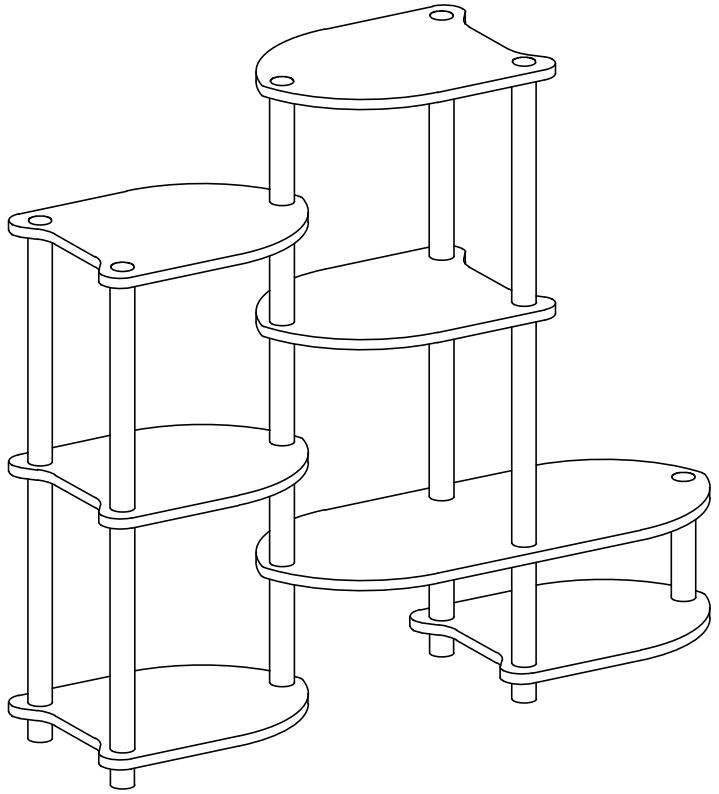

THIS PRODUCT MUST ALWAYS BE MOUNTED A WALL OR STUD FOR USE.

MODEL: 26064

2606420260715

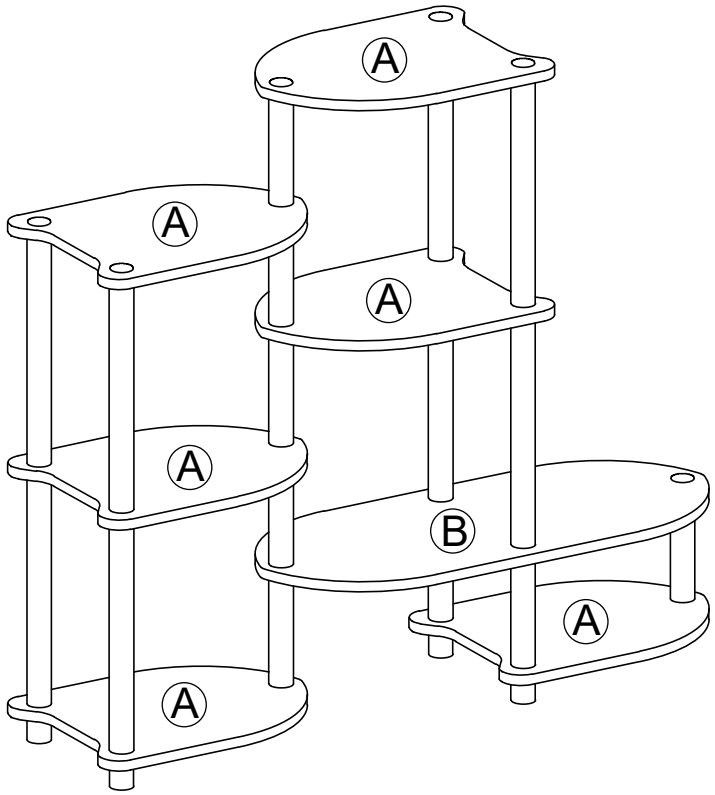

1 x 6	2 x 6	3 x 8
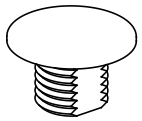		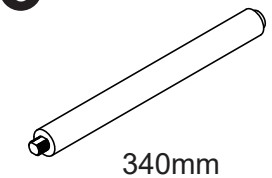 340mm
4 x 8	5 x 1	
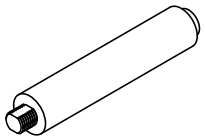 162mm	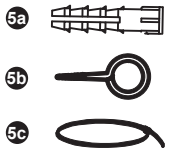 5a 5b 5c	

1

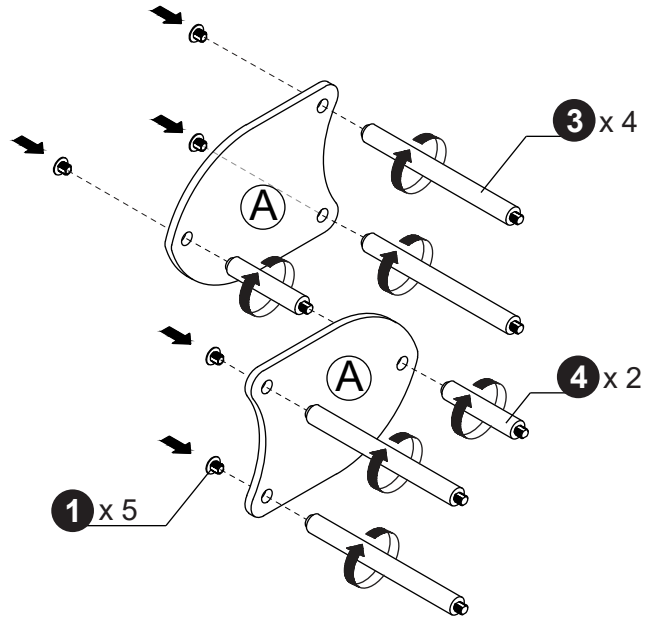

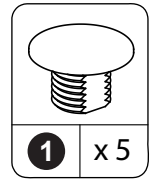

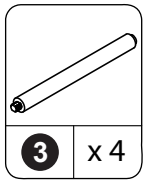

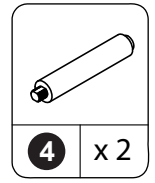

2

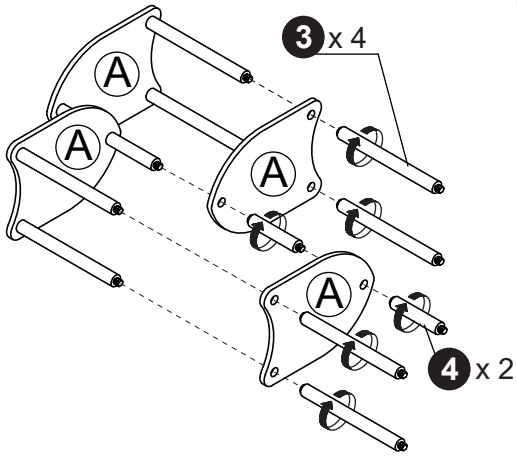

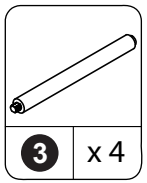

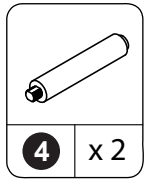

3

