8

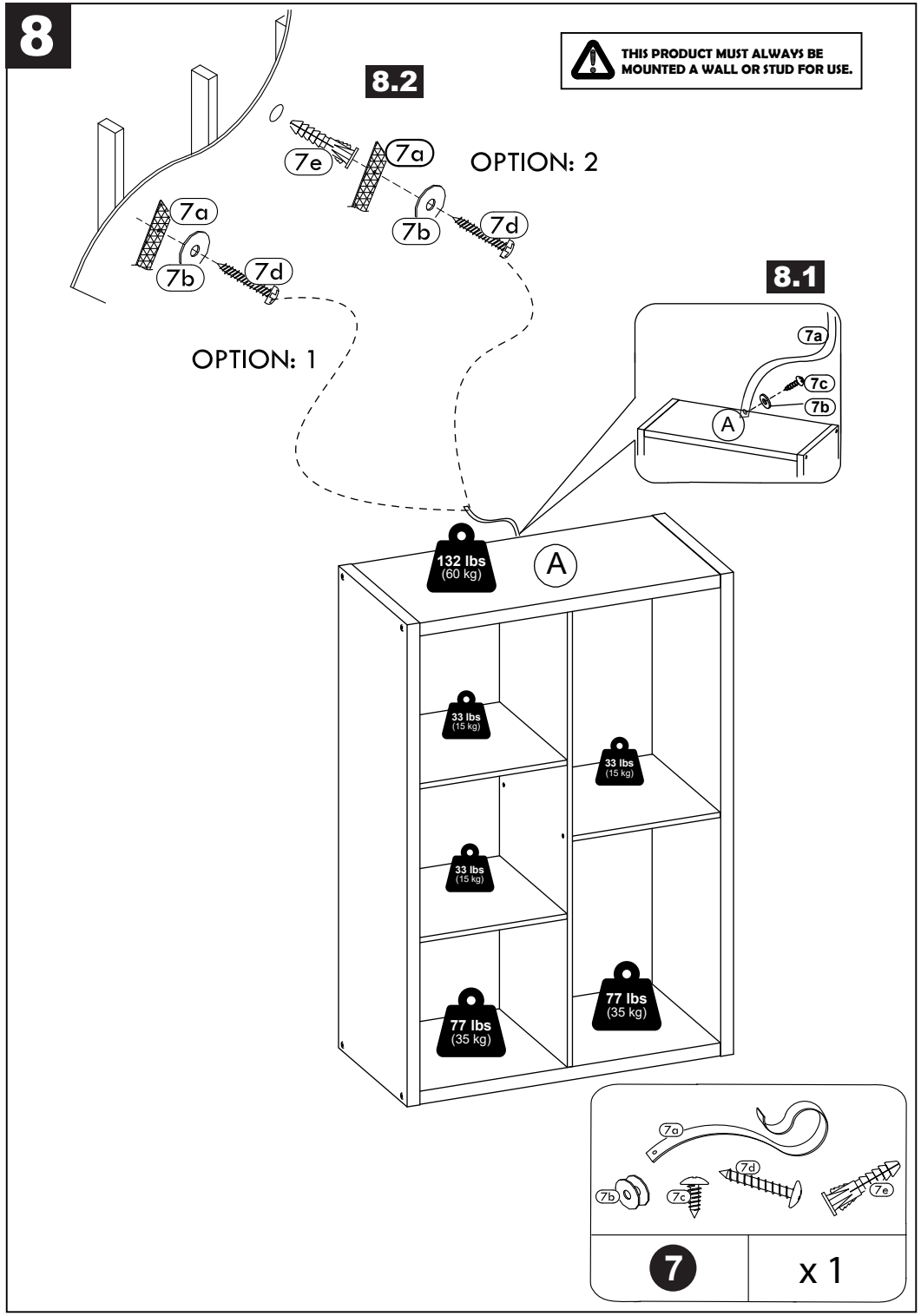



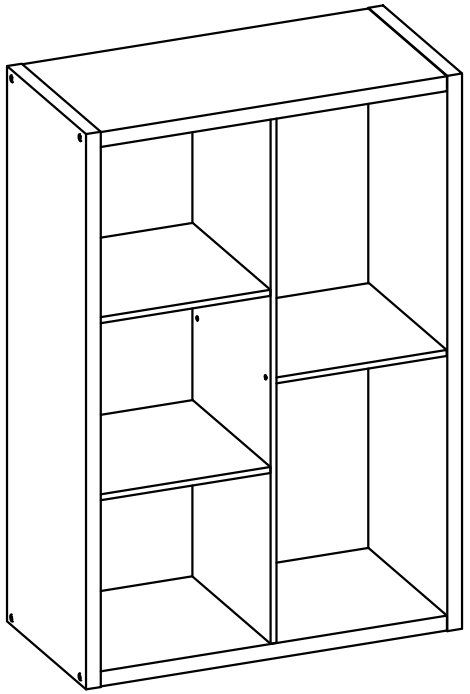

THIS PRODUCT MUST ALWAYS BE MOUNTED A WALL OR STUD FOR USE.

MODEL: 26207

2620720260612

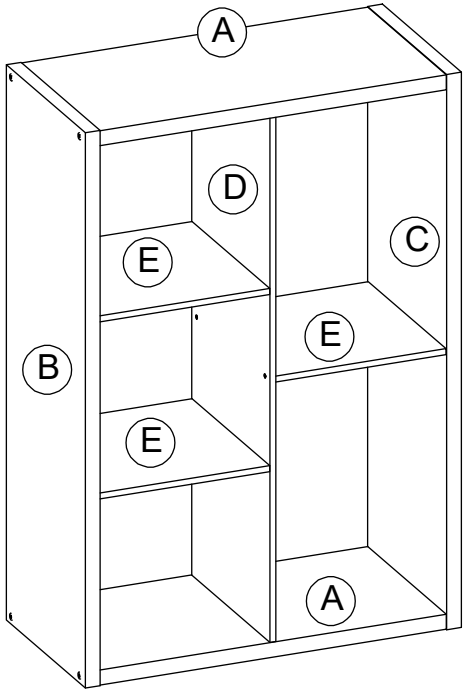

1 x 6 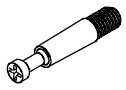	2 x 6 	3 x 8  M7 x 75mm	4 x 1 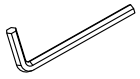
5 x 4 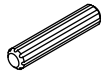	6 x 6  M4 x 32mm	7 x 1 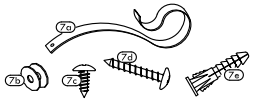	8 x 8 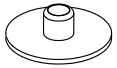

6

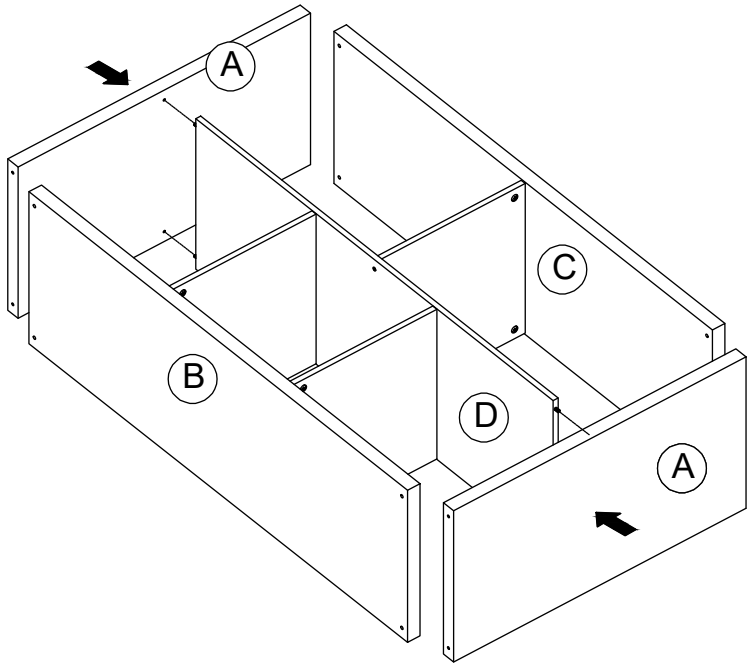

7

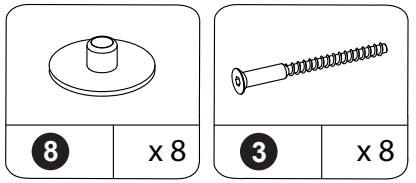

5

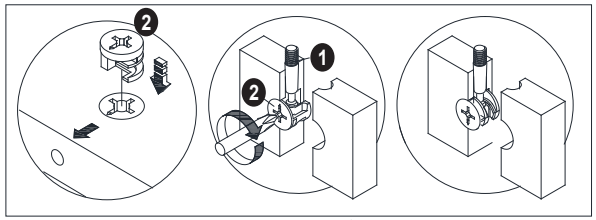

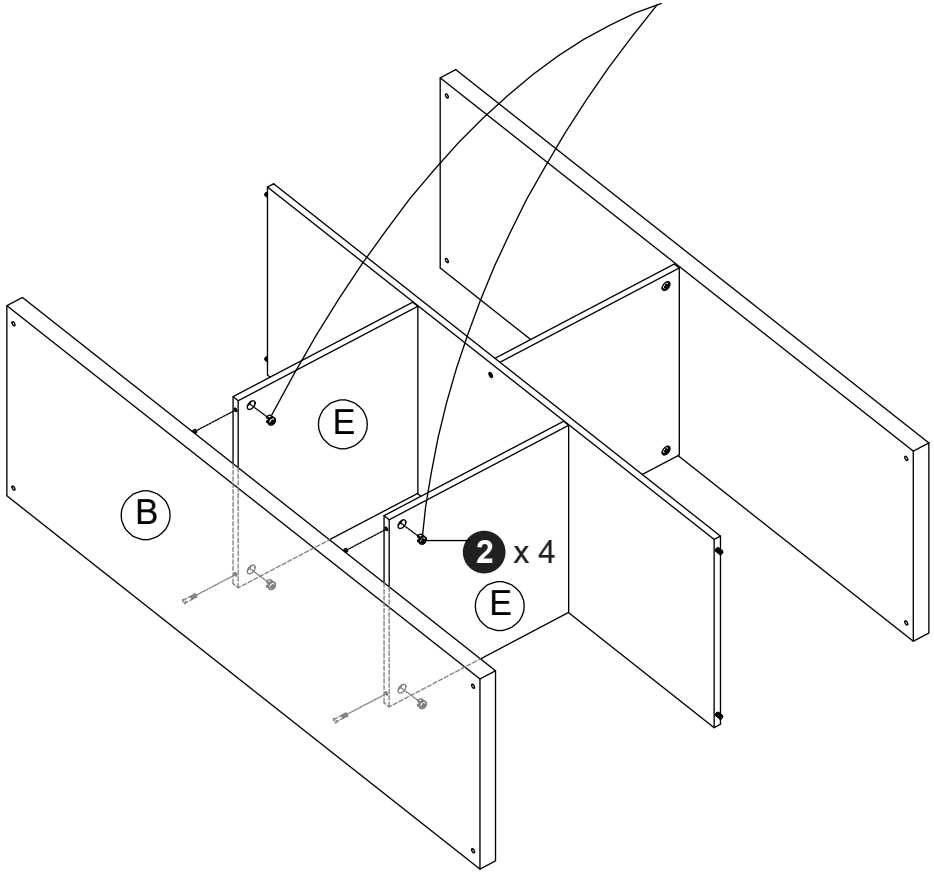

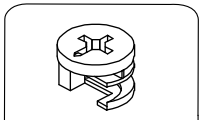

2	x 4

1

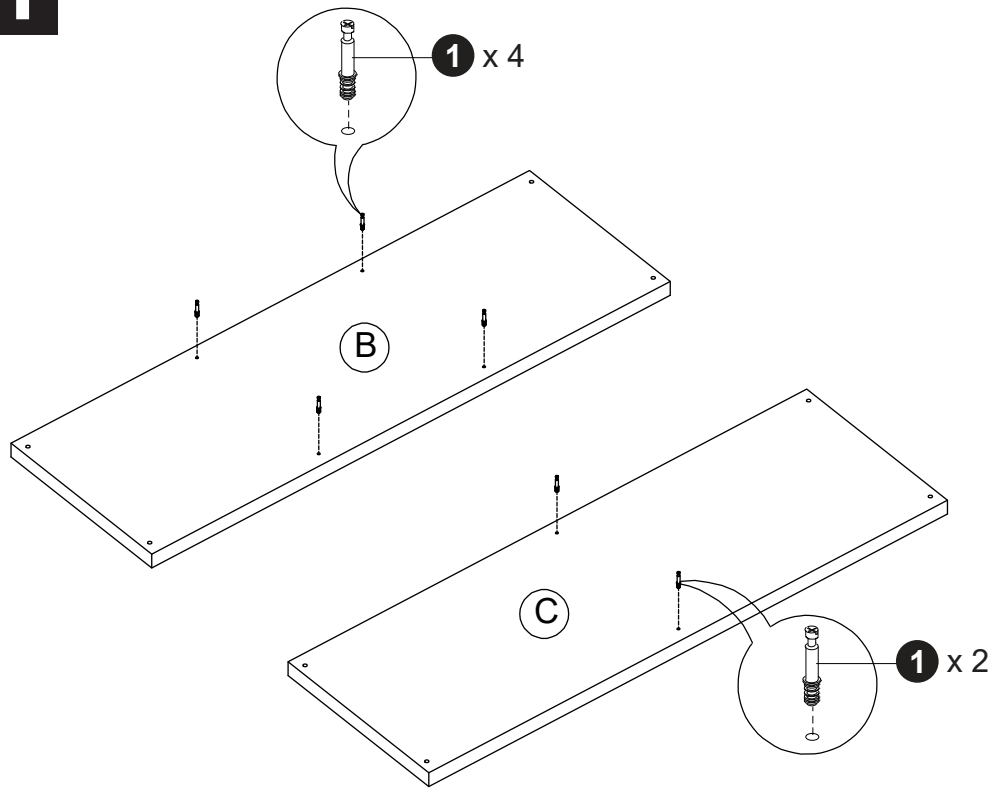

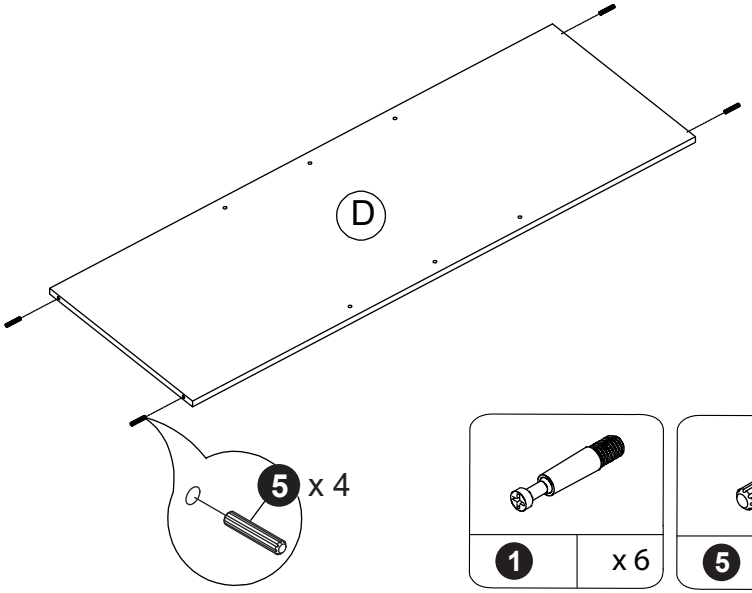

1	x 6

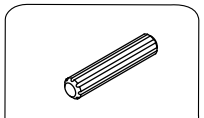

5	x 4

2

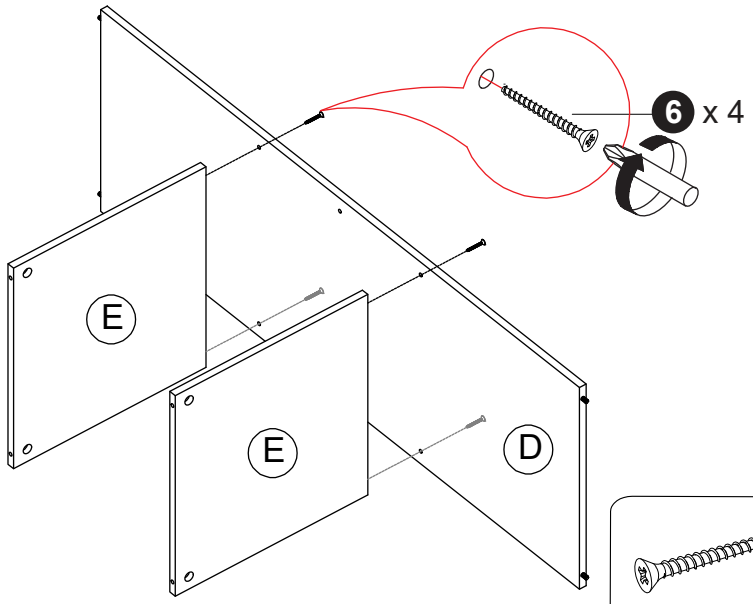

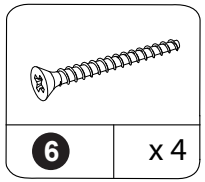

3

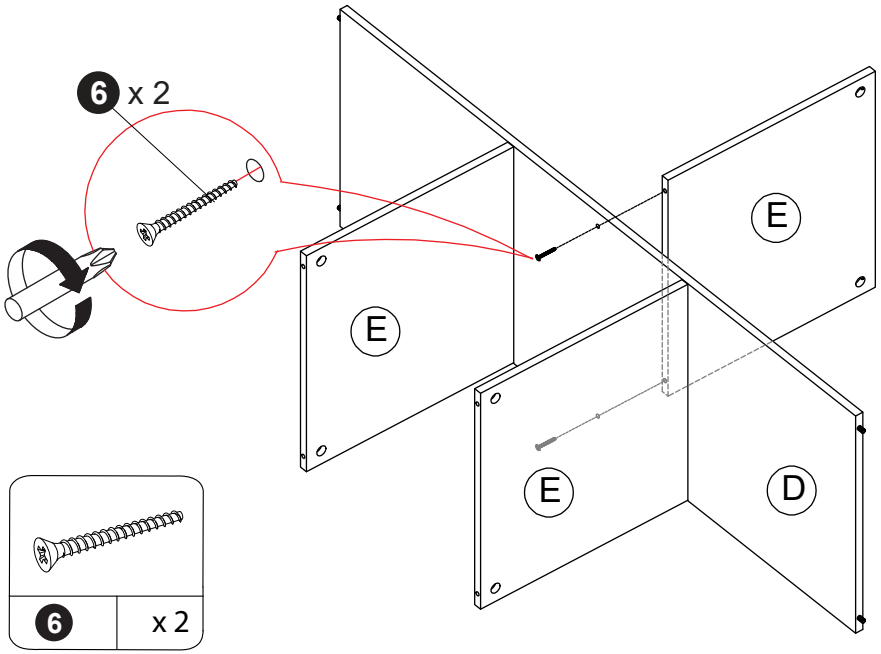

4

