8

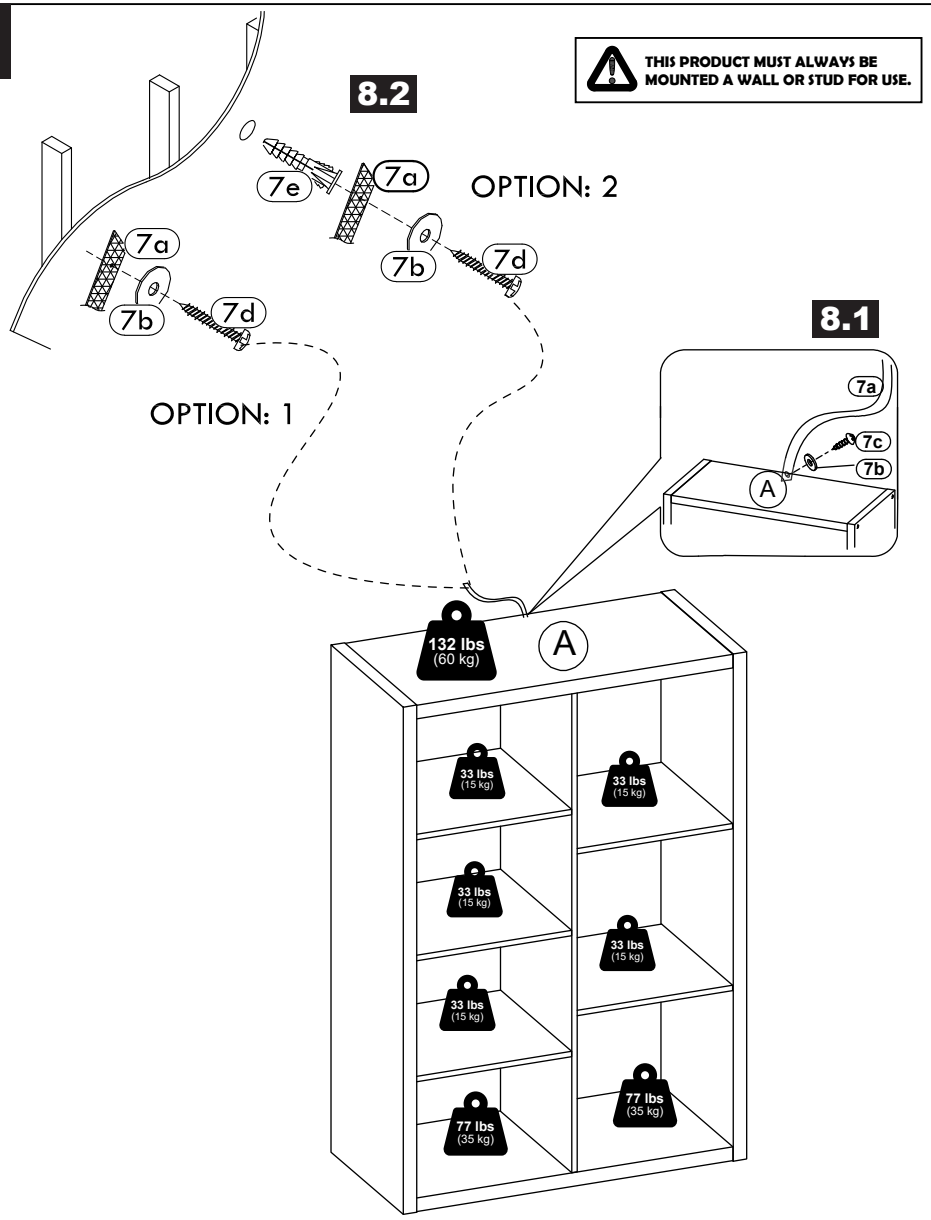

THIS PRODUCT MUST ALWAYS BE MOUNTED A WALL OR STUD FOR USE.

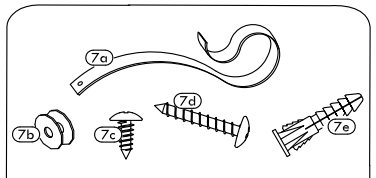

7	x 1





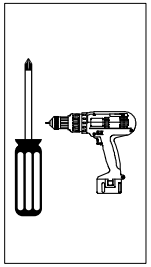

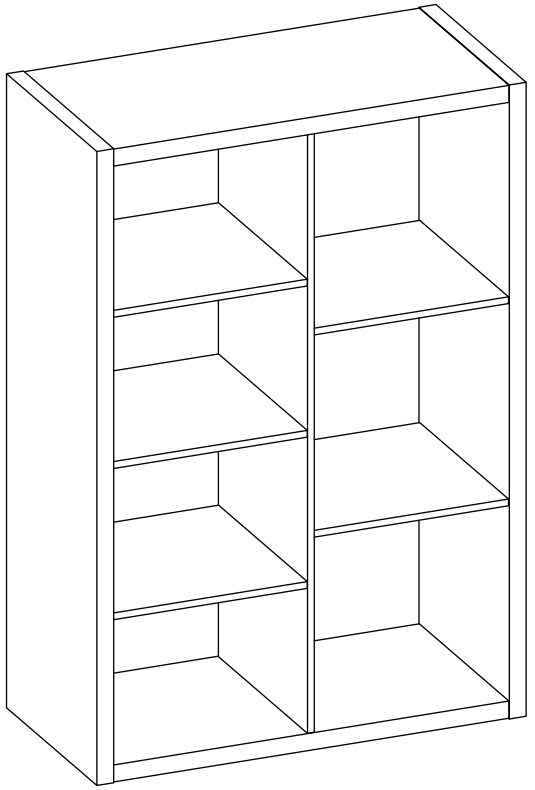

THIS PRODUCT MUST ALWAYS BE MOUNTED A WALL OR STUD FOR USE.

MODEL: 26208

2620820260923

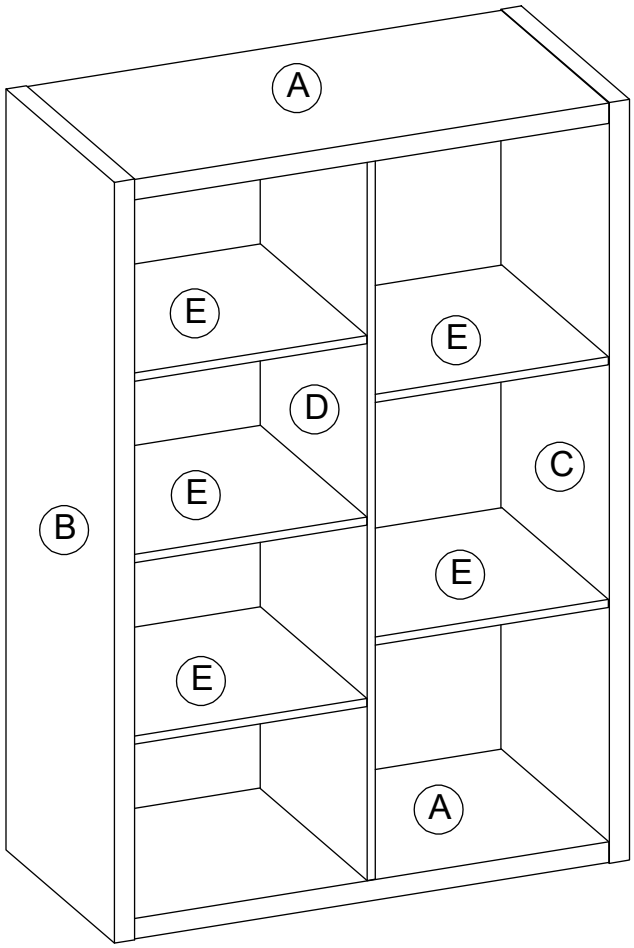

1 x 10	2 x 10	3 x 8	4 x 1
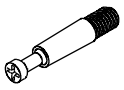		 M7 x 75mm	
5 x 4	6 x 10	7 x 1	8 x 8
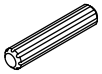	 M4 x 32mm	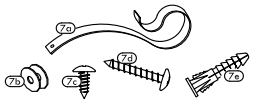	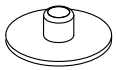

6

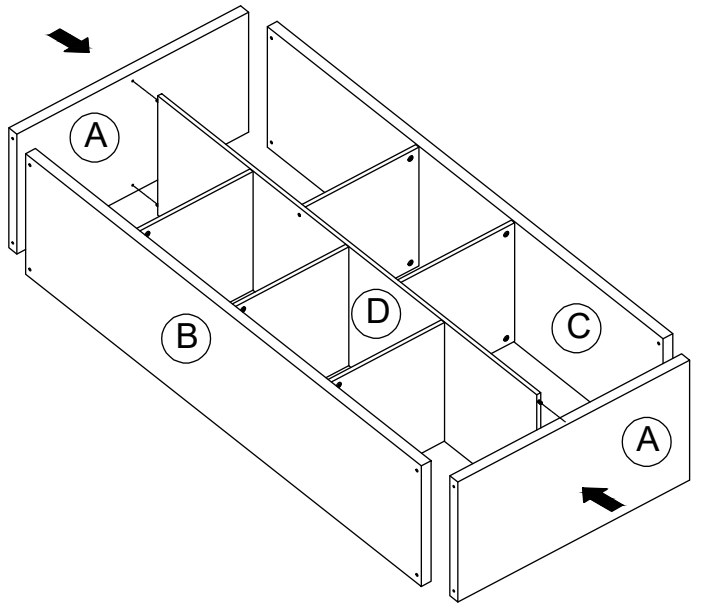

7

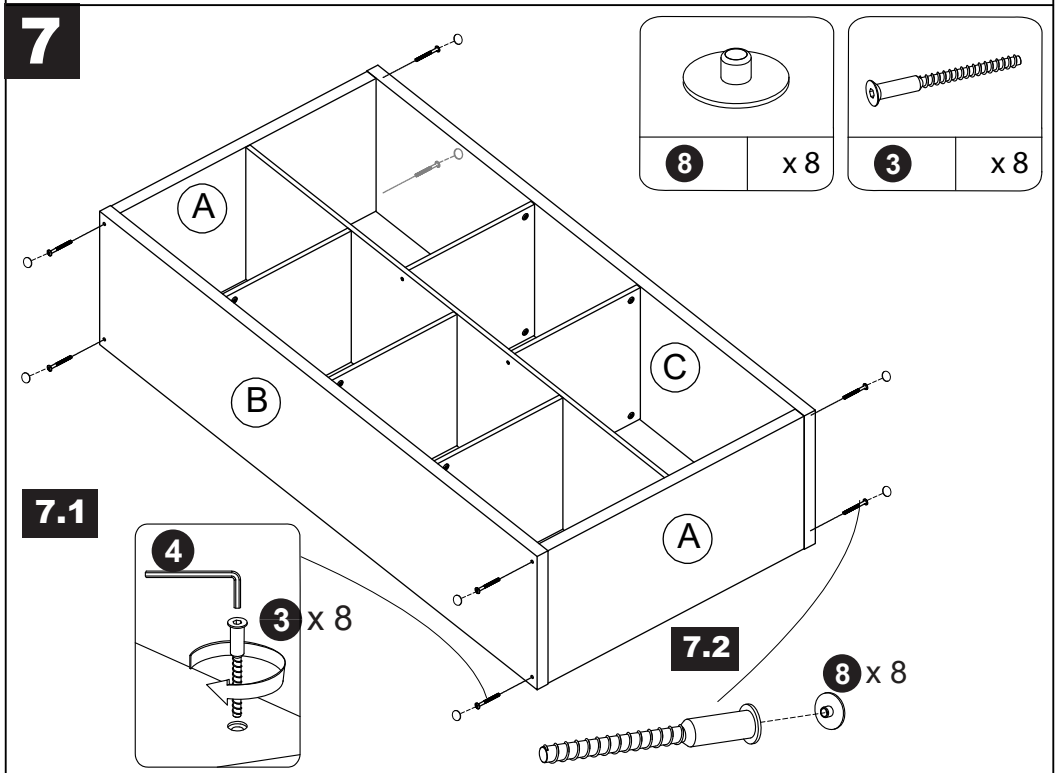

5

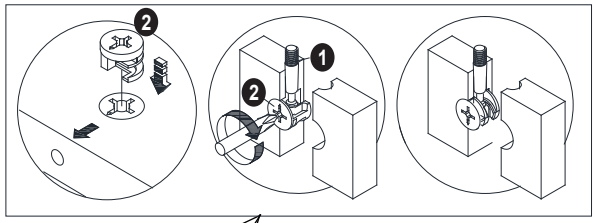

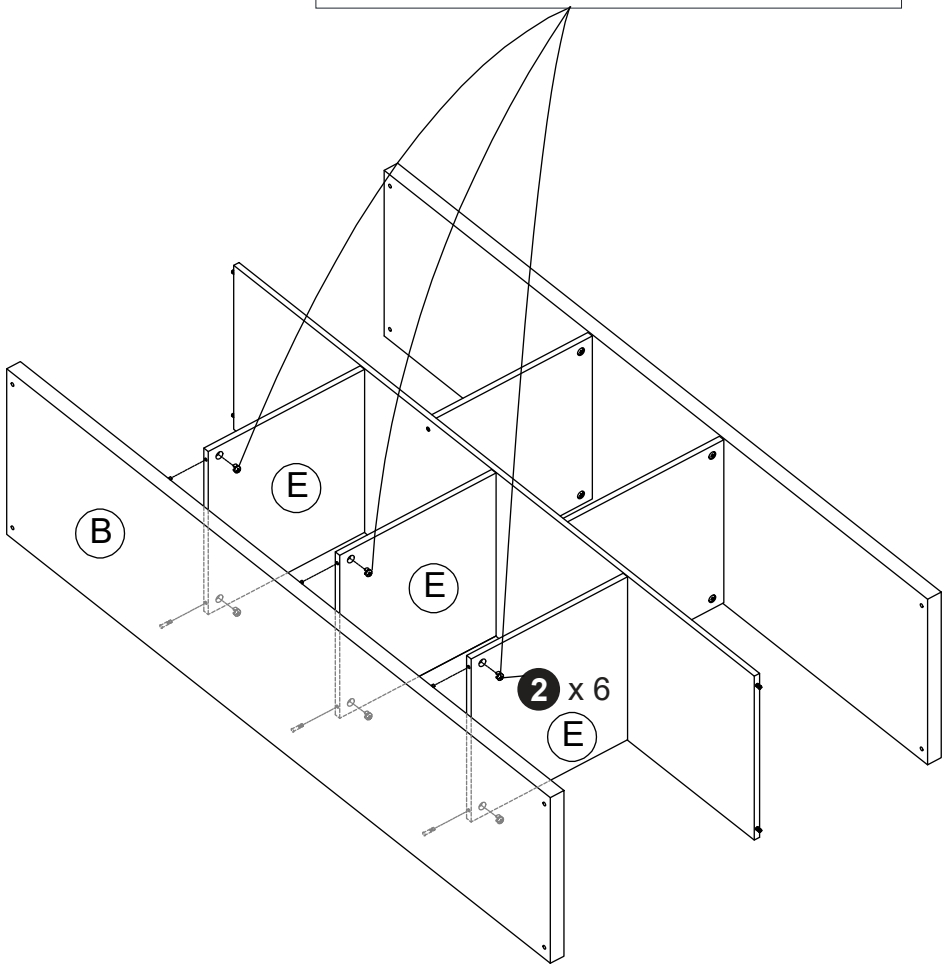

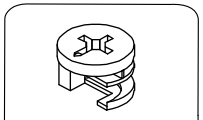

1

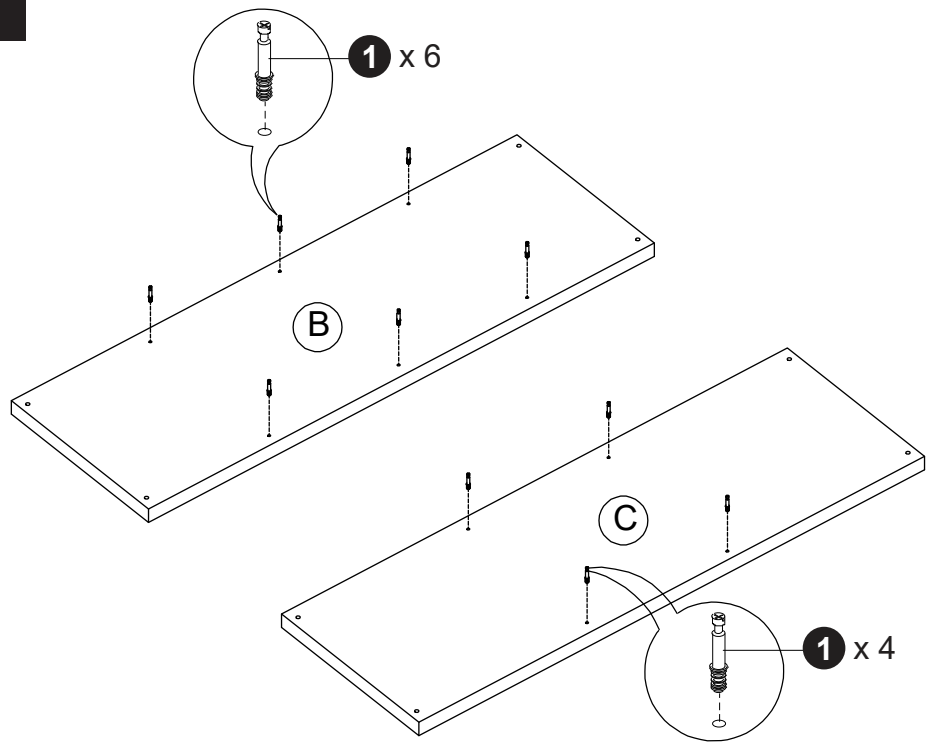

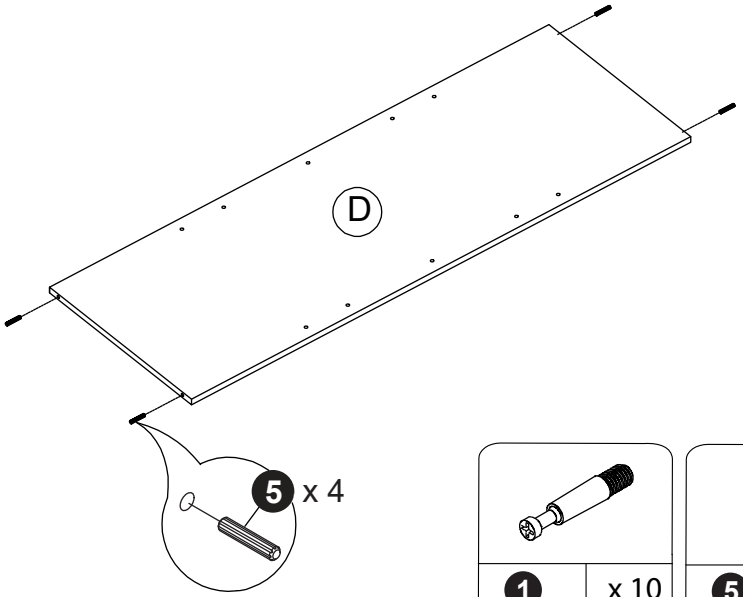

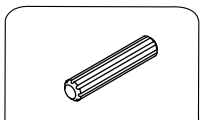

2

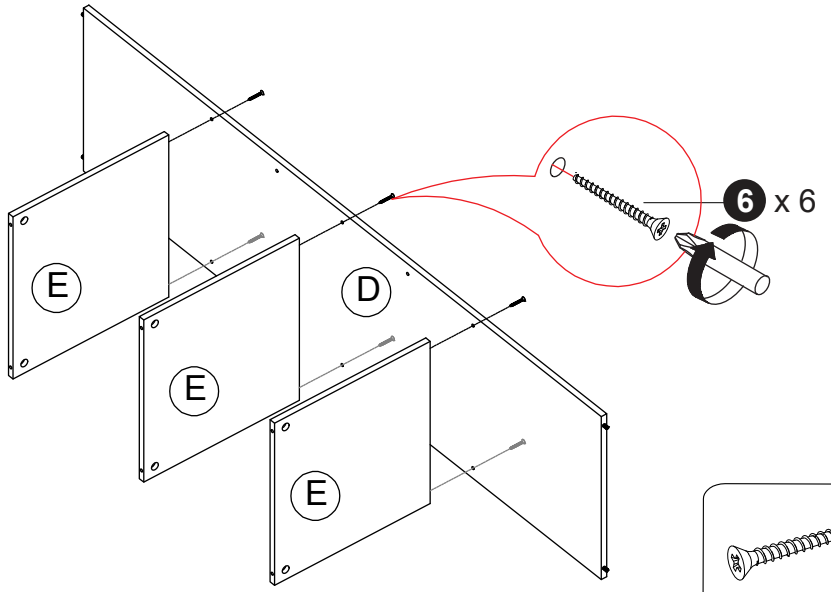

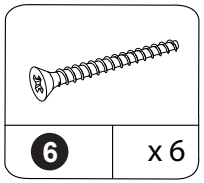

3

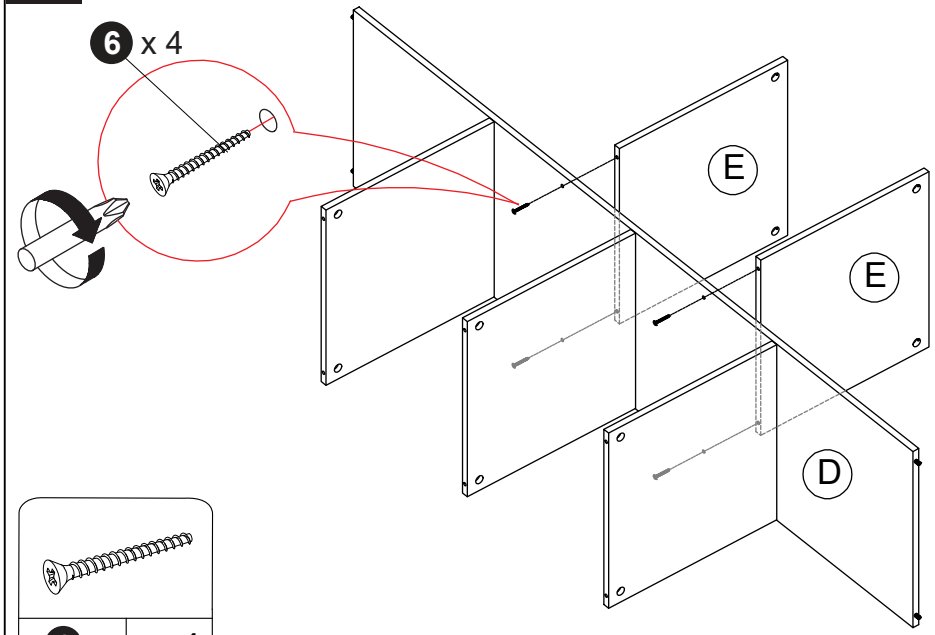

4

