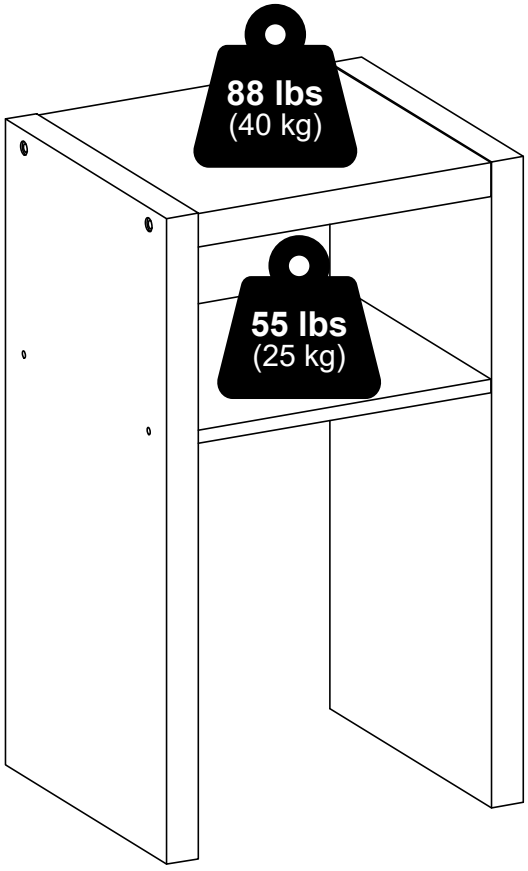





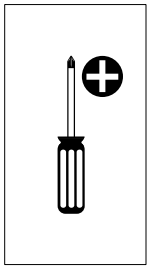

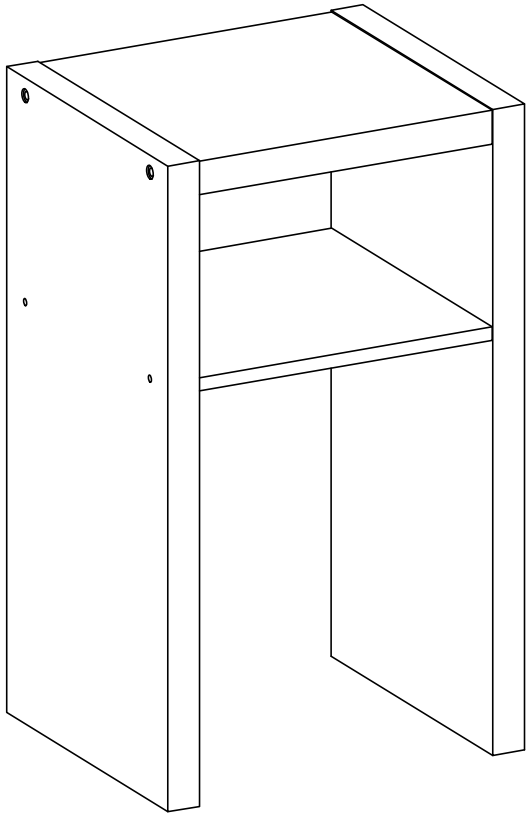

MODEL: 26221

2622120260606

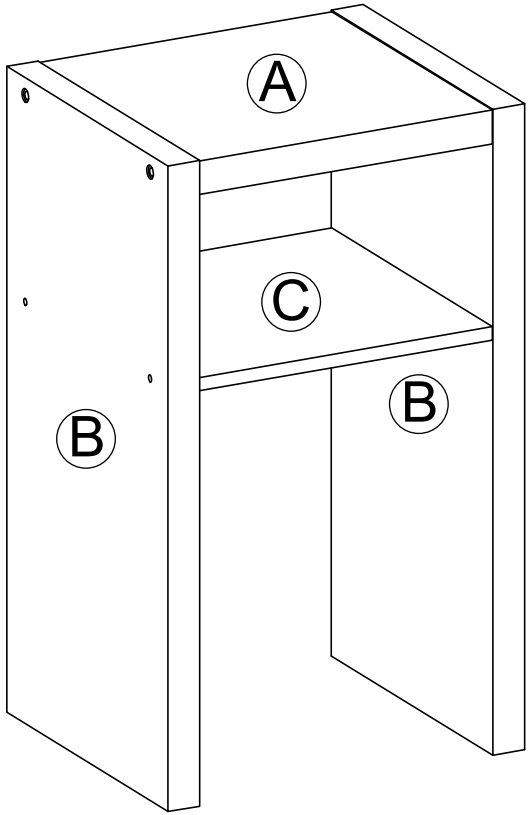

1 x 4 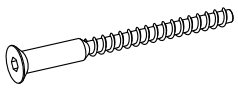 M7 x 75mm	2 x 4 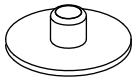
3 x 1 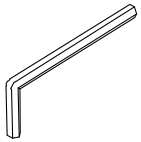	
4 x 4  M4 x 45mm	5 x 4 