3

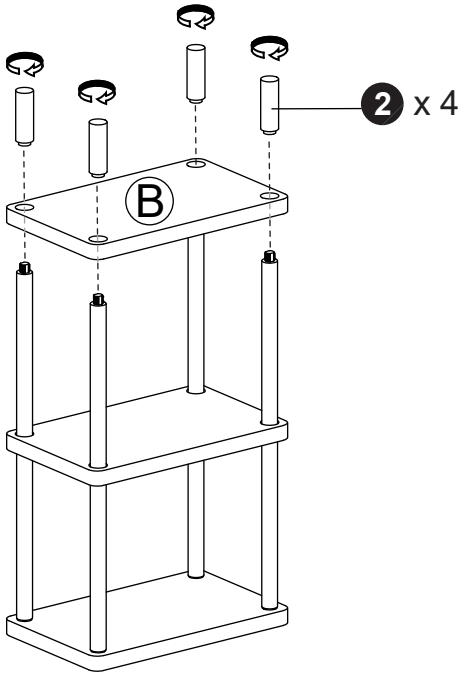

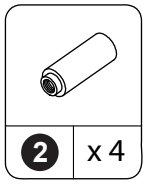

4

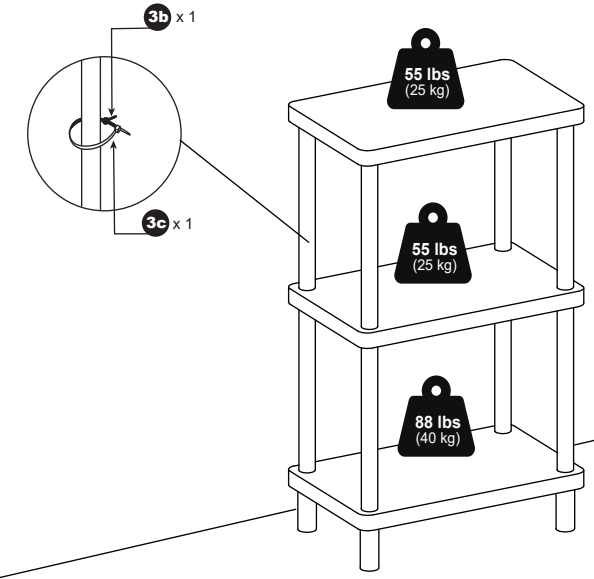

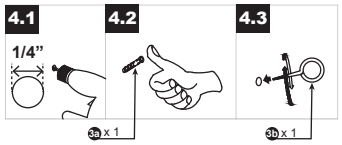

THIS PRODUCT MUST ALWAYS BE MOUNTED A WALL OR STUD FOR USE.



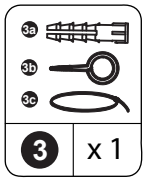





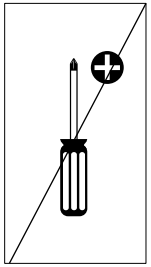

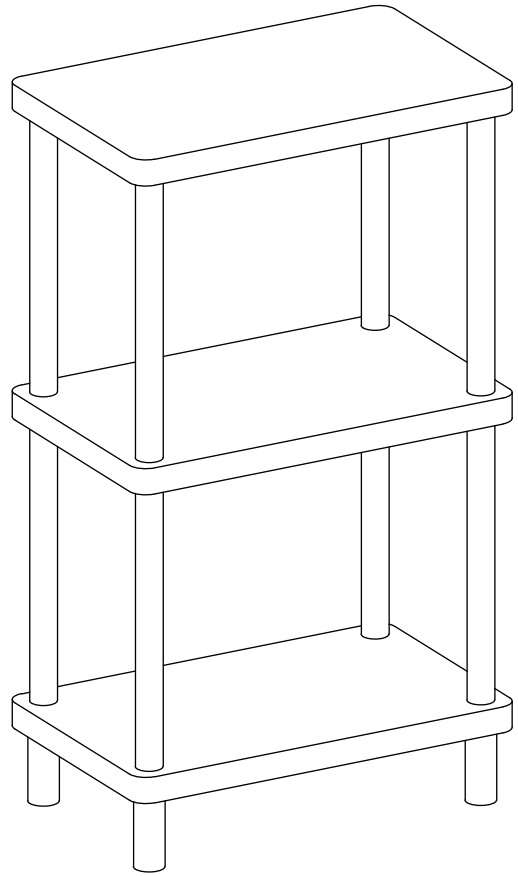

THIS PRODUCT MUST ALWAYS BE MOUNTED A WALL OR STUD FOR USE.

MODEL: 26224

2622420260624

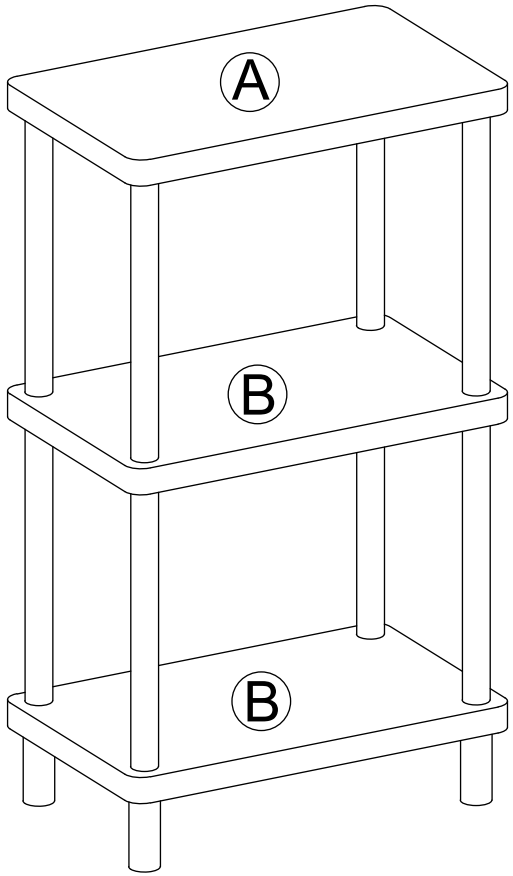

1 x 8 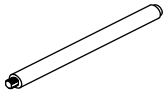 340 mm	2 x 4 	3 x 1 3a  3b  3c 

1

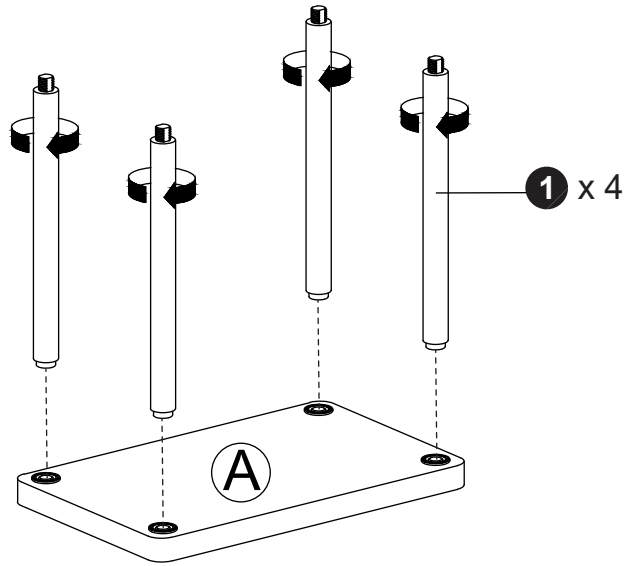

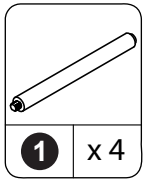

2

