3

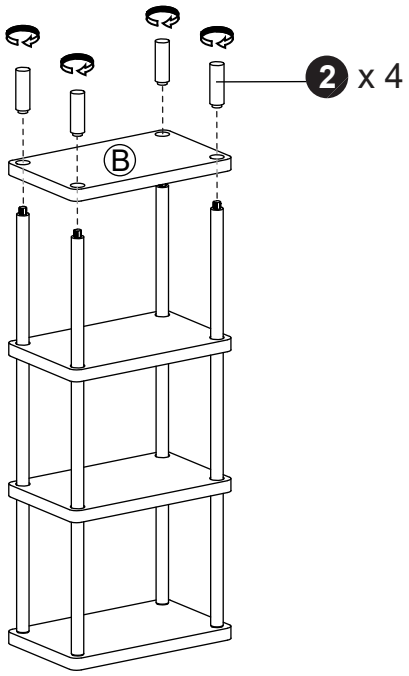

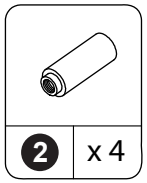

4

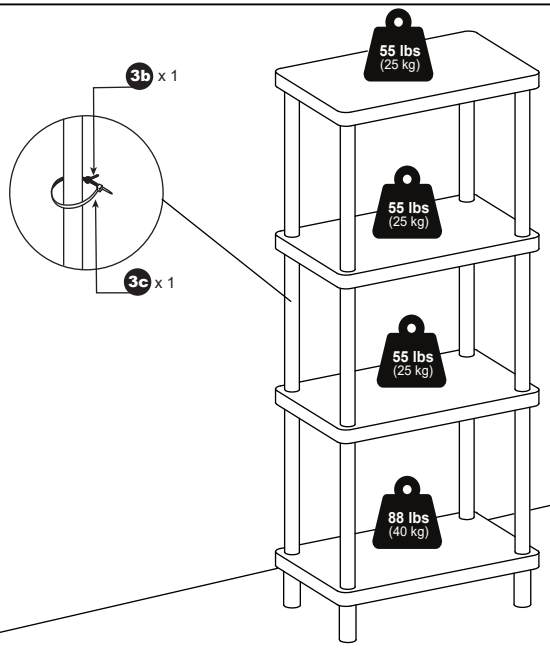

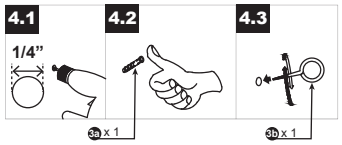

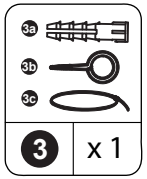

THIS PRODUCT MUST ALWAYS BE MOUNTED A WALL OR STUD FOR USE.



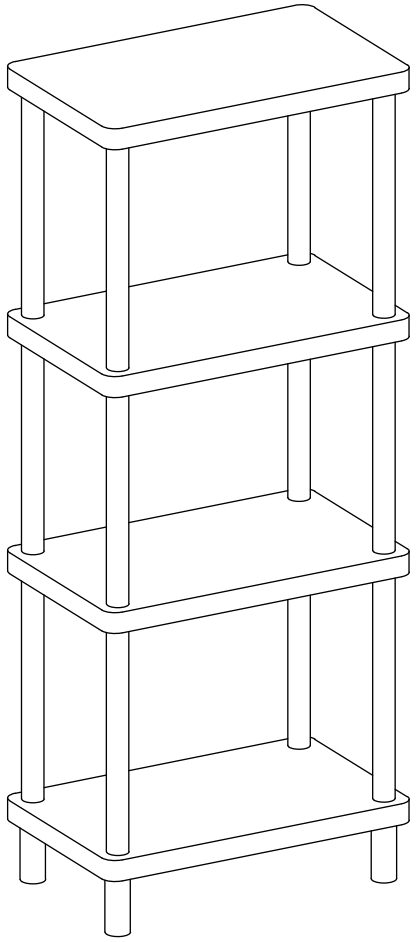

THIS PRODUCT MUST ALWAYS BE MOUNTED A WALL OR STUD FOR USE.

MODEL: 26225

2622520260624

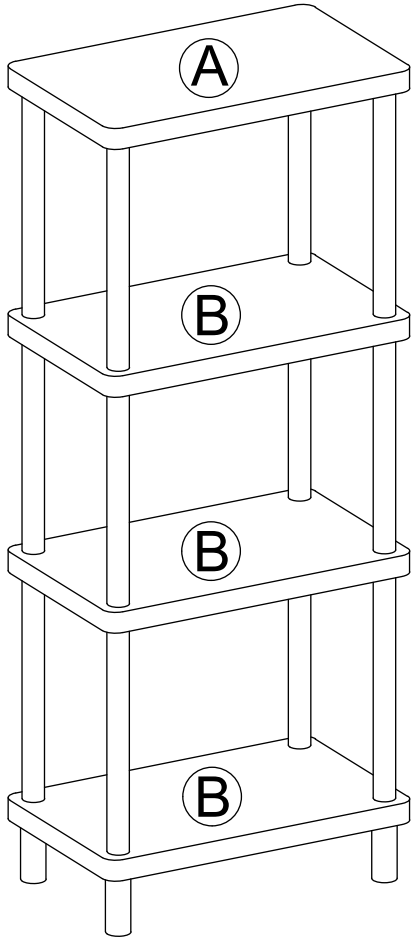

1 x 12 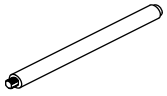 340 mm	2 x 4 	3 x 1 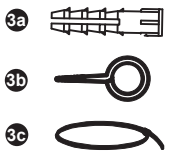 3a 3b 3c

1

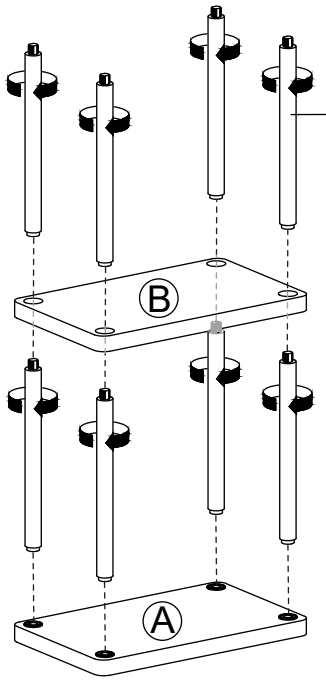

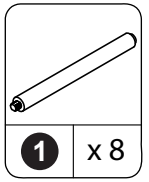

2

