3

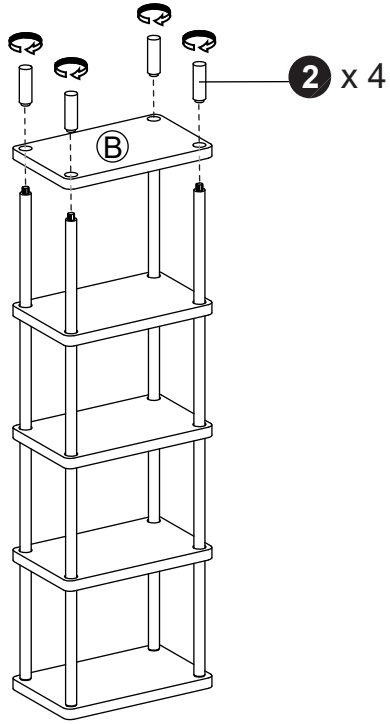

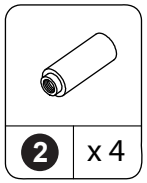

4

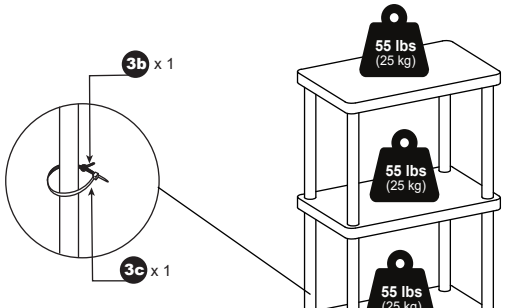

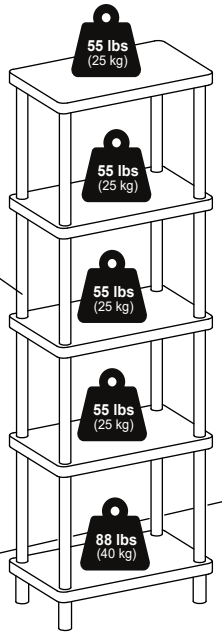

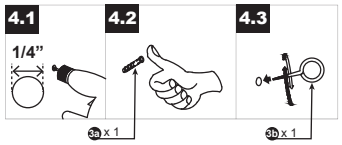

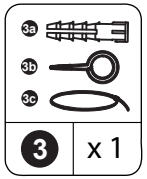

THIS PRODUCT MUST ALWAYS BE MOUNTED A WALL OR STUD FOR USE.





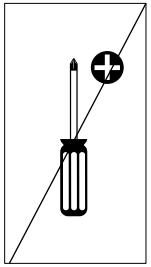

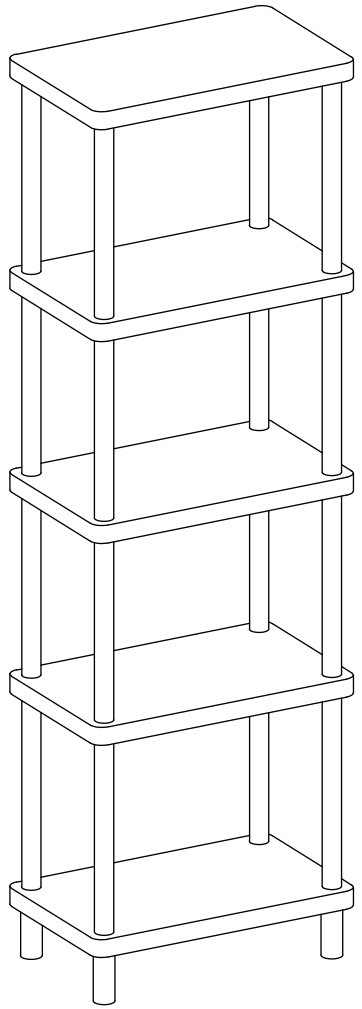

THIS PRODUCT MUST ALWAYS BE MOUNTED A WALL OR STUD FOR USE.

MODEL: 26226

2622620260624

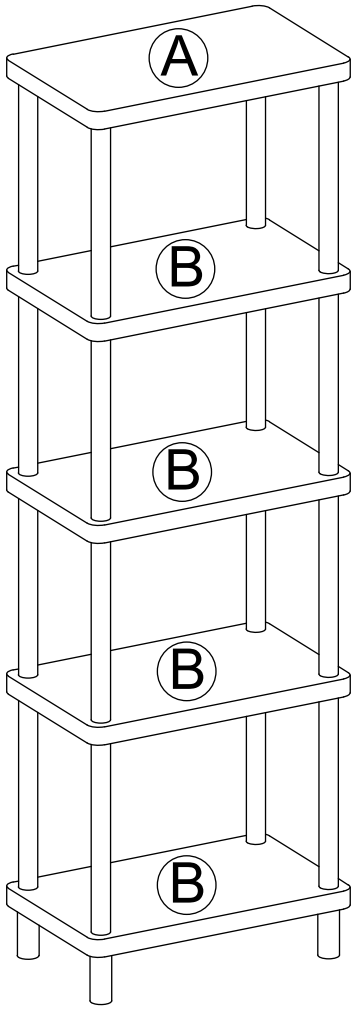

1 x 16 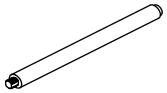 340 mm	2 x 4 	3 x 1 3a  3b  3c 

1

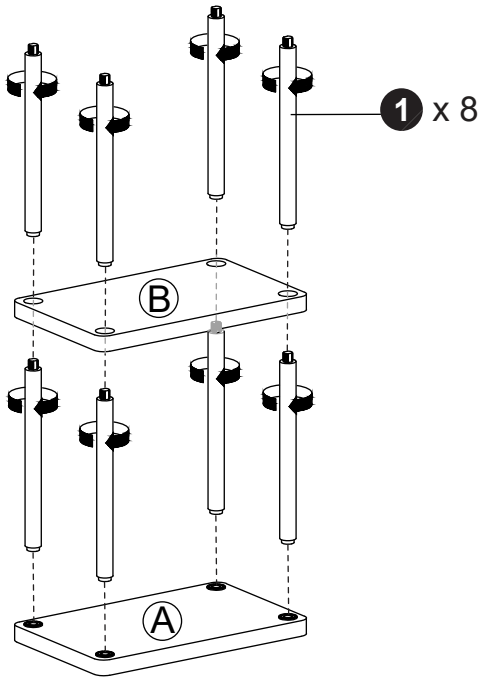

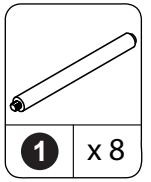

2

