11

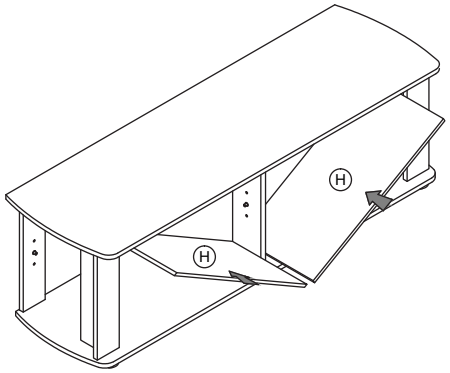

12

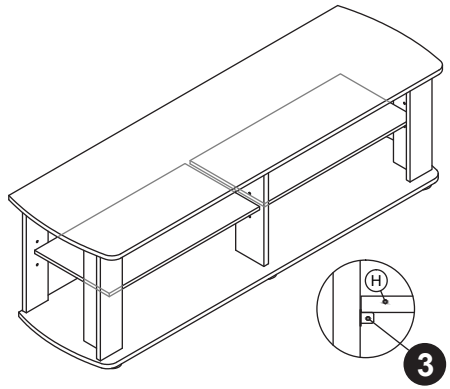

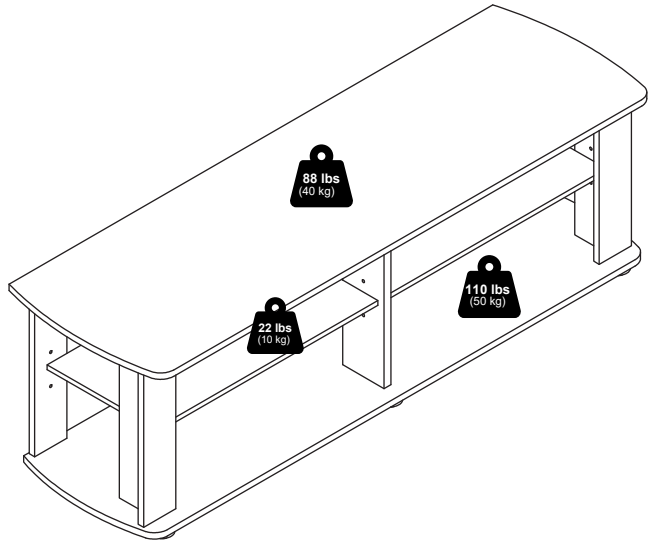







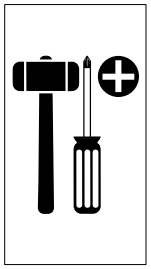

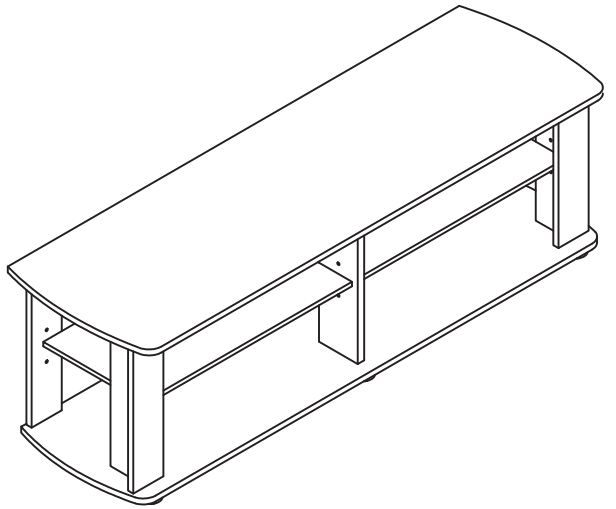

MODEL: 26247

2624720260508

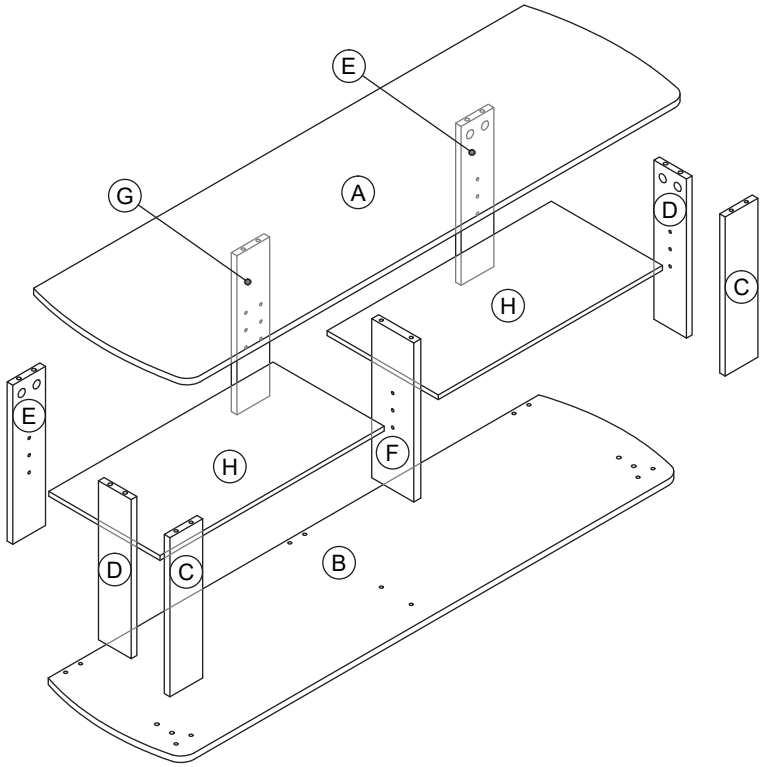

1 x 12  M4 x 32mm	2 x 12 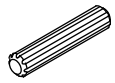 M6 x 20mm	3 x 8  6/5 x 15.5mm
4 x 6 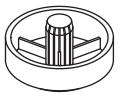 40 x 14mm	5 x 8 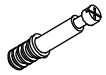 6 x 31mm	6 x 8  15mm
7 x 1 7a 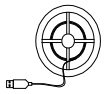 7b  x 2 7c  x 2		

9

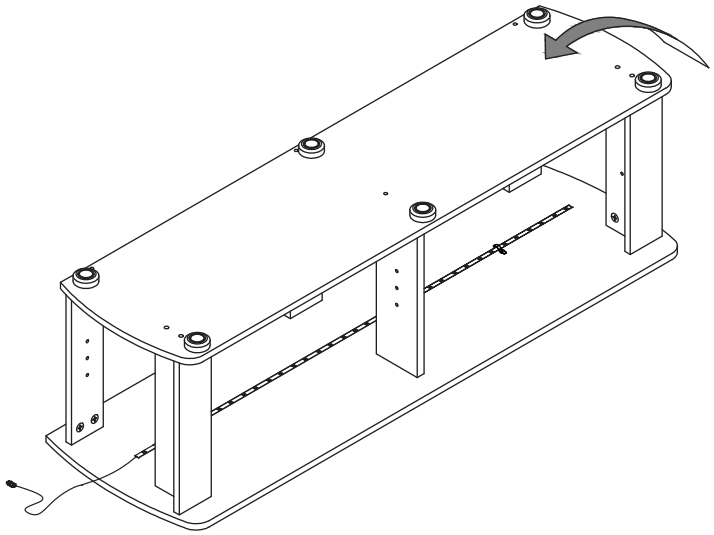

10

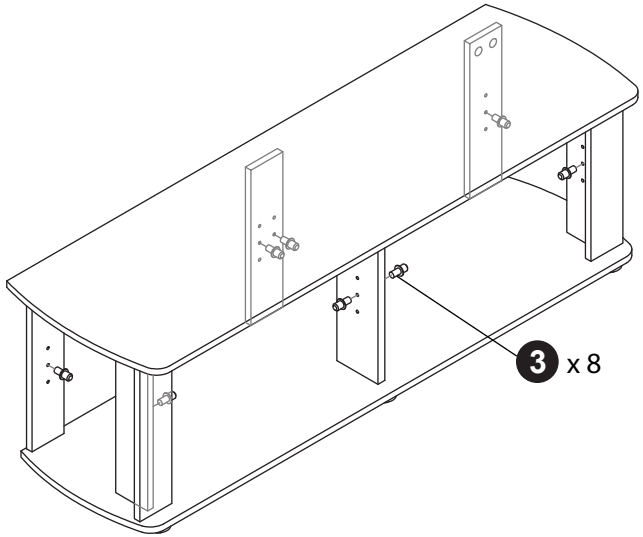

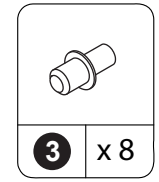

7

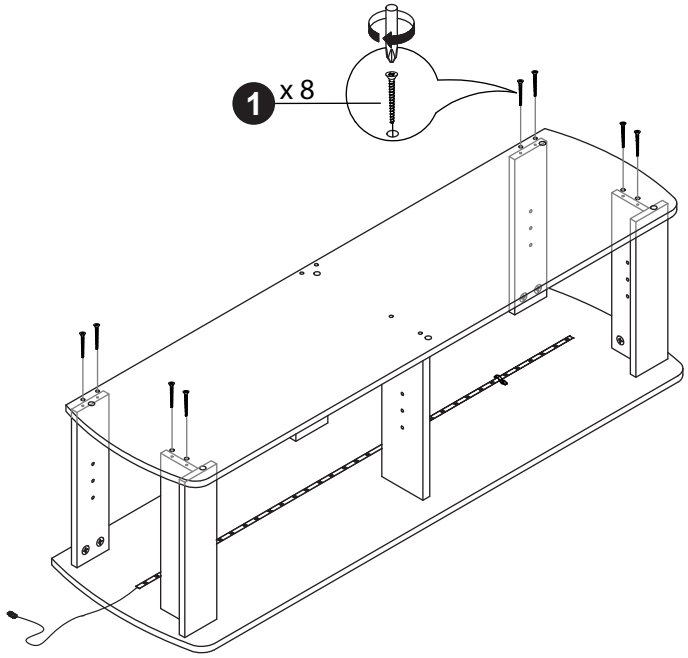

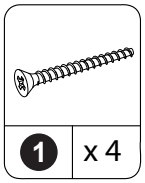

8

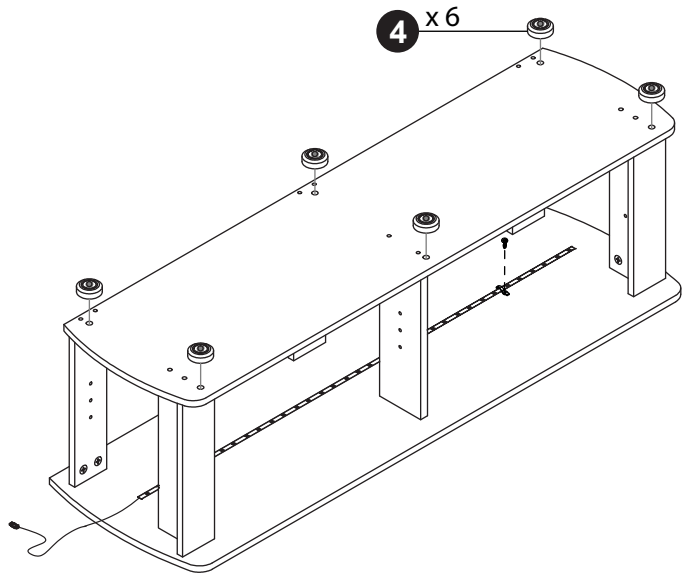

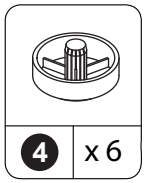

1

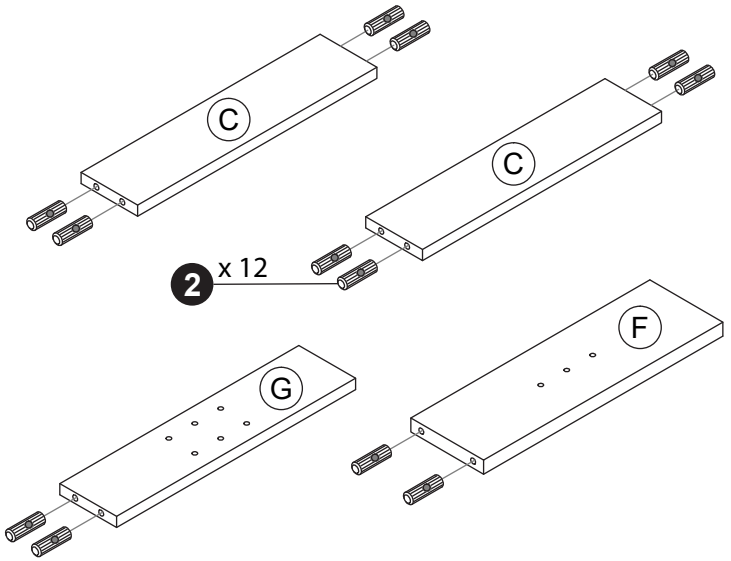

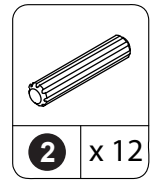

2

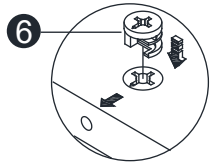

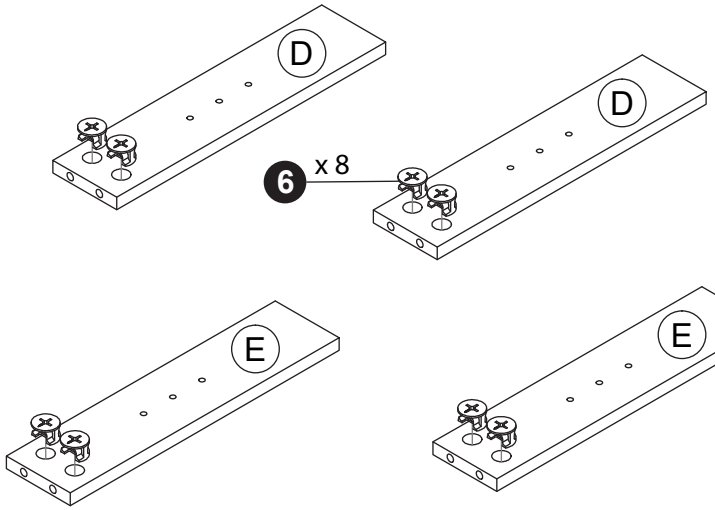

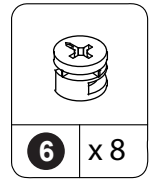

3

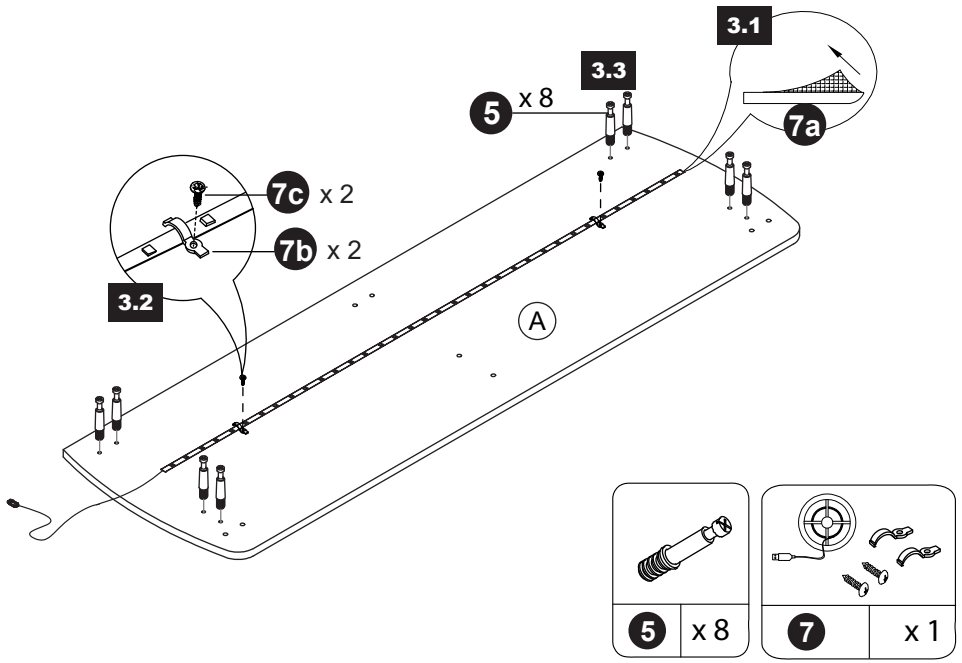

4

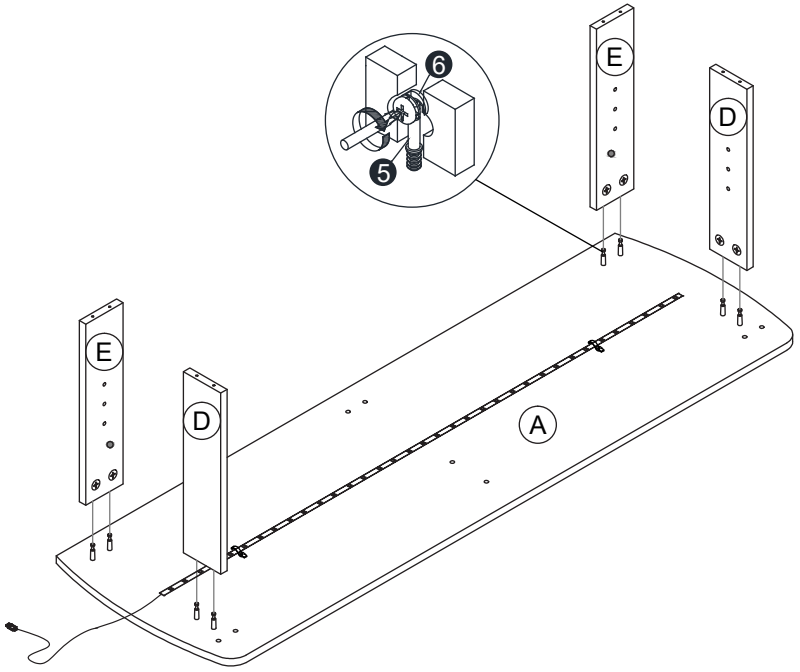

5

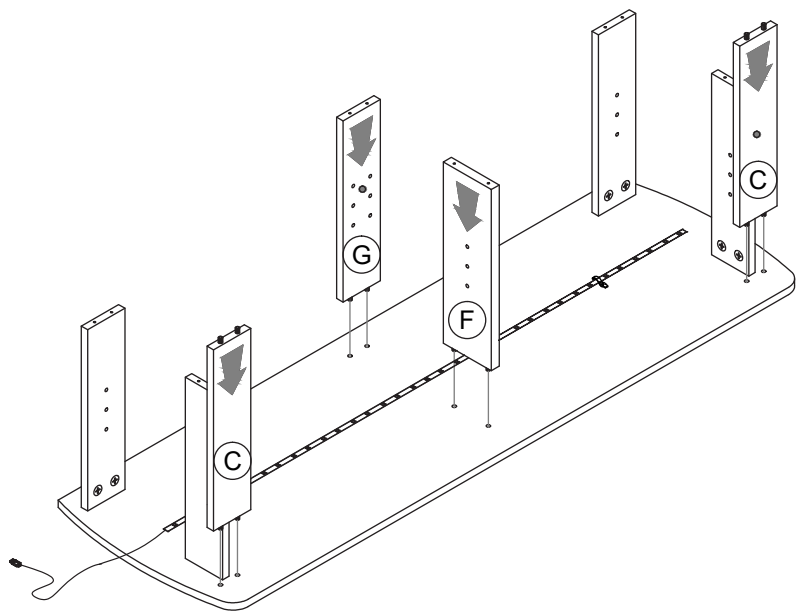

6

