7

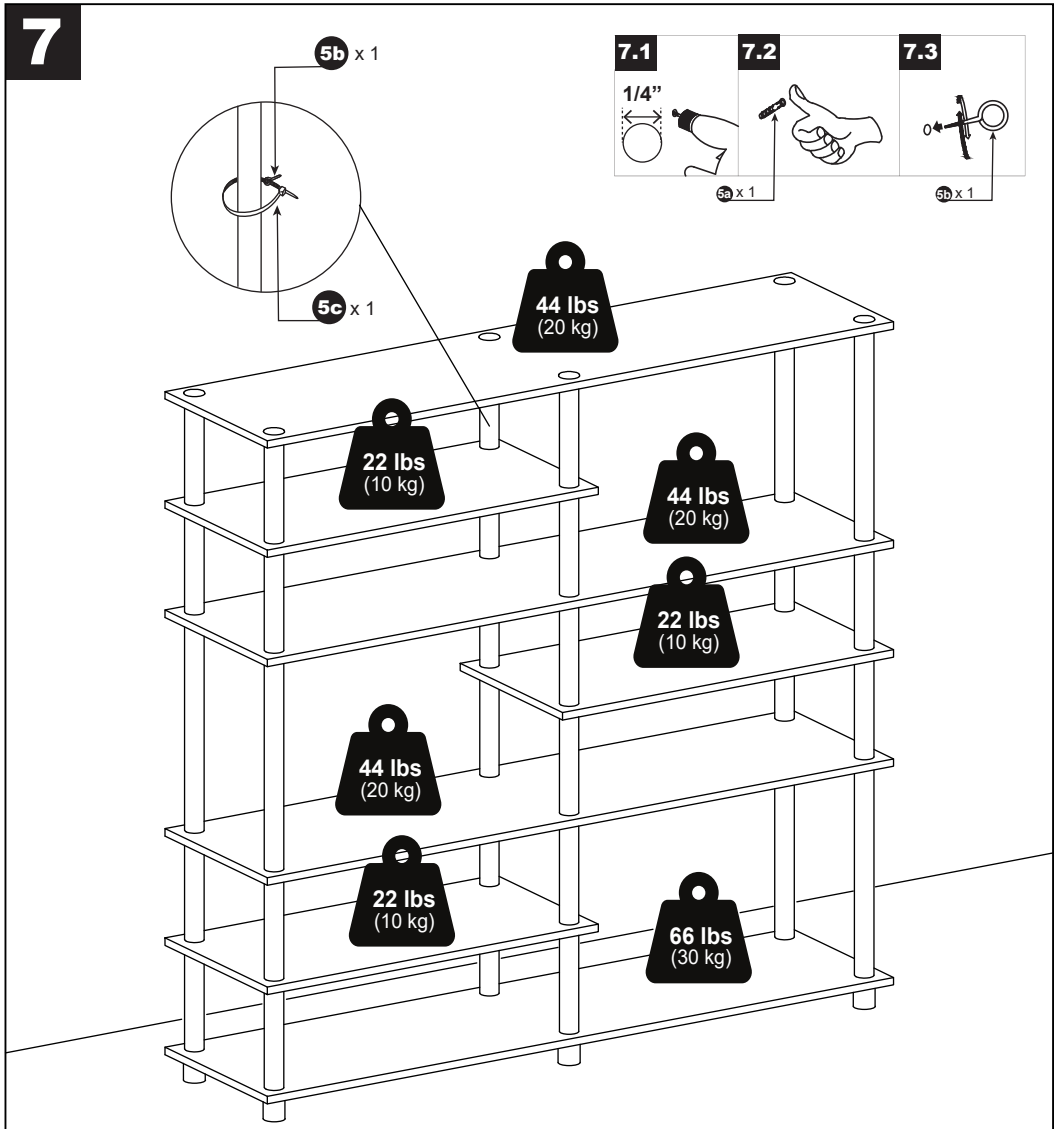

THIS PRODUCT MUST ALWAYS BE MOUNTED A WALL OR STUD FOR USE.

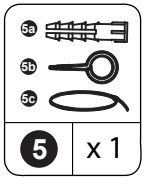



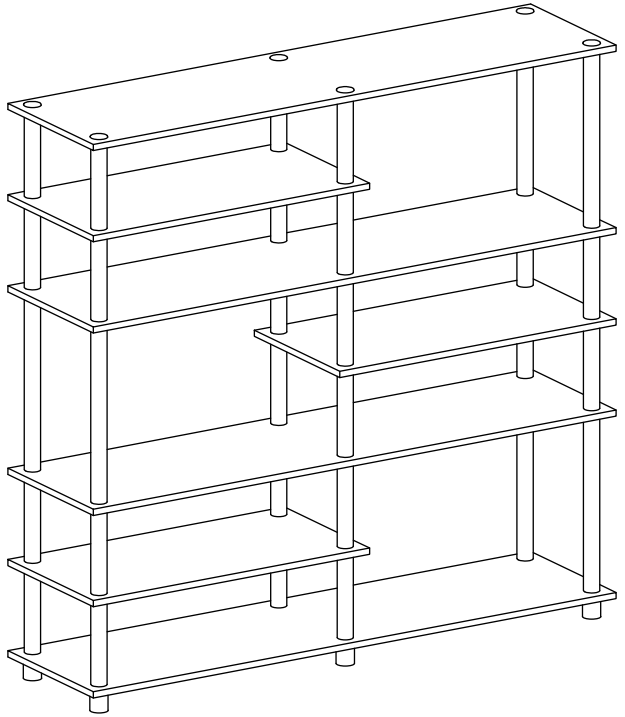

THIS PRODUCT MUST ALWAYS BE MOUNTED A WALL OR STUD FOR USE.

MODEL: 26267

2626720260615

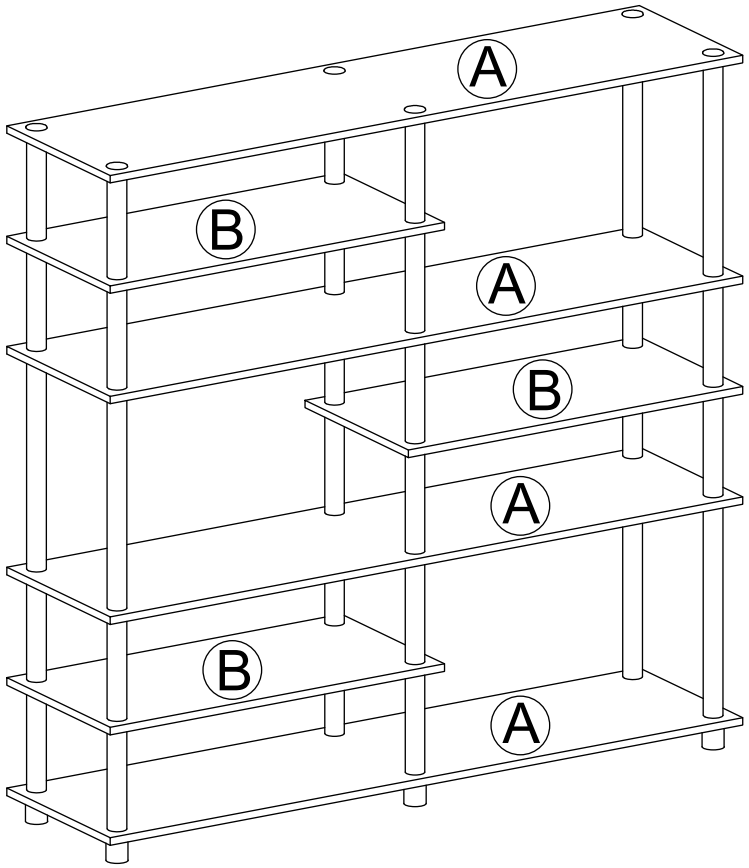

1 x 6

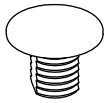

2 x 6



3 x 6

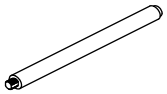

340 mm

4 x 24

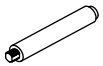

162 mm

5 x 1

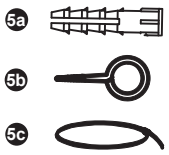

6

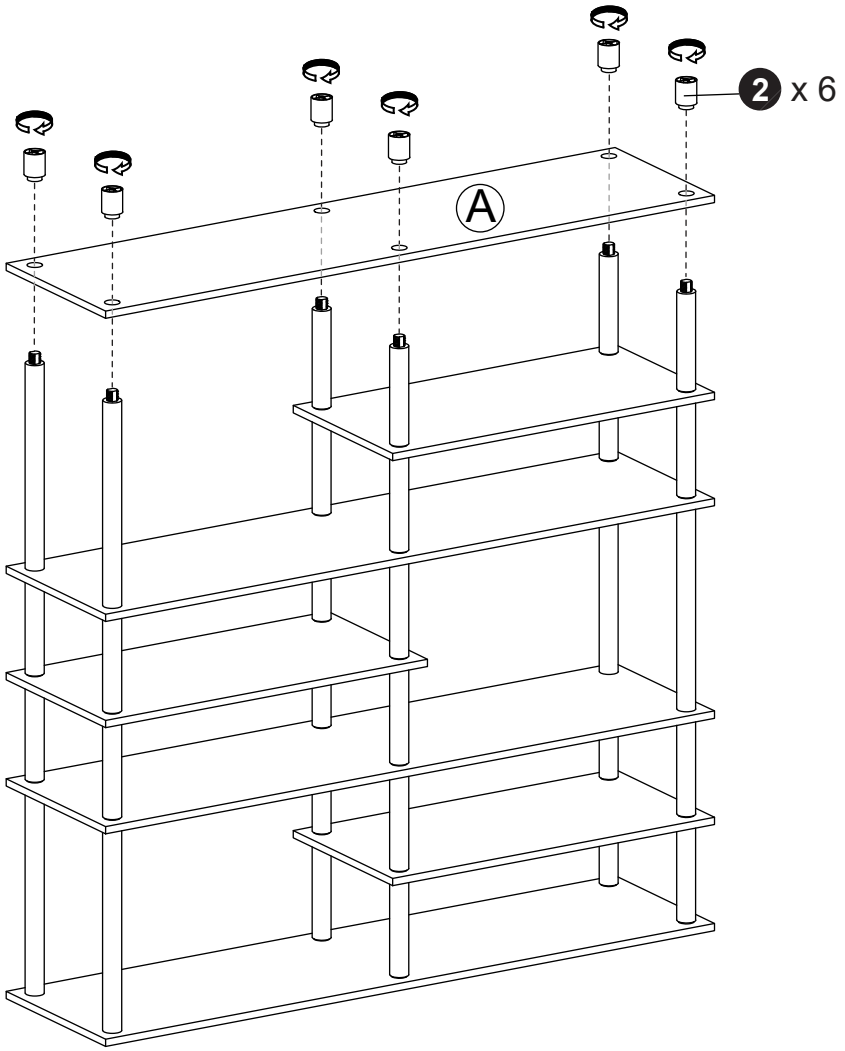

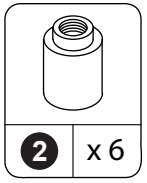

5

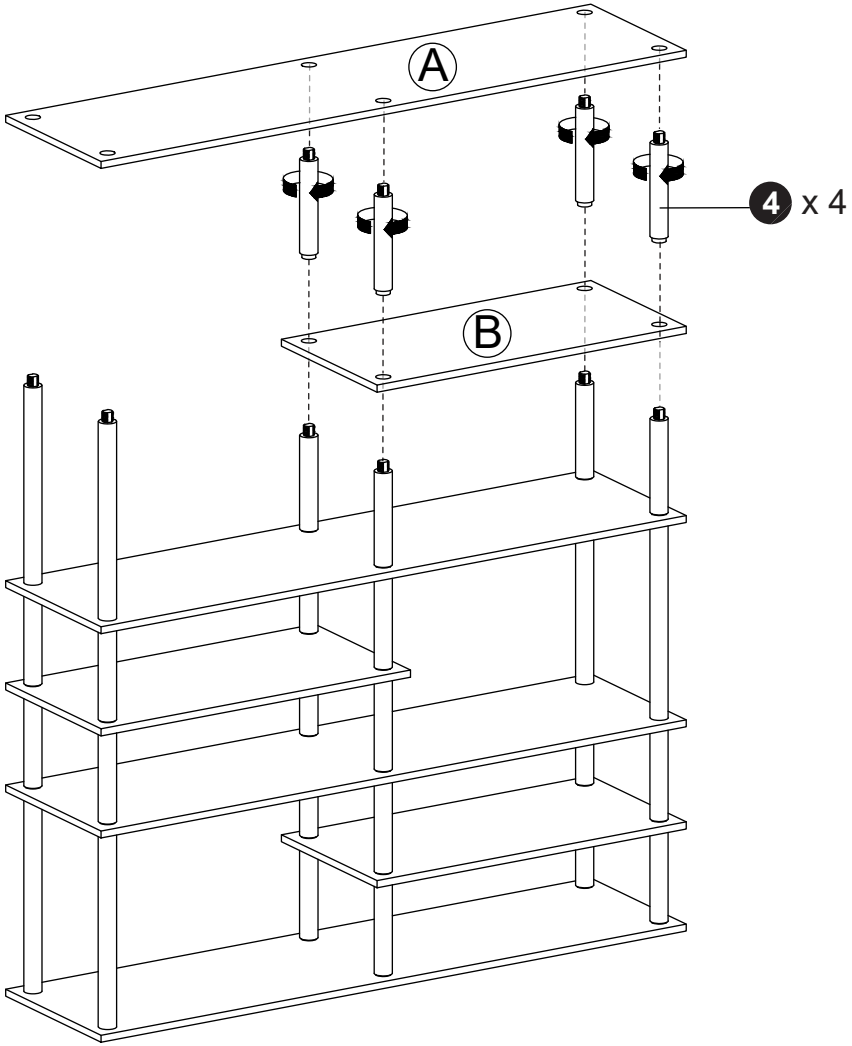

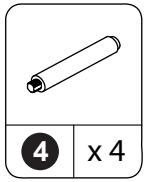

1

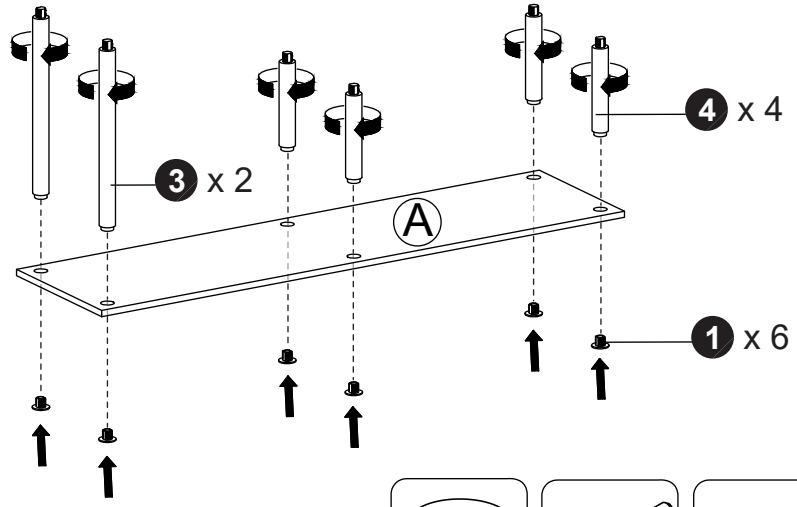

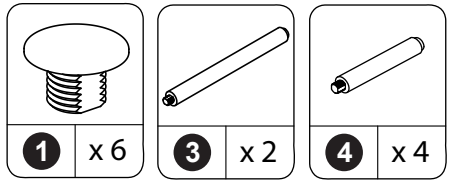

2

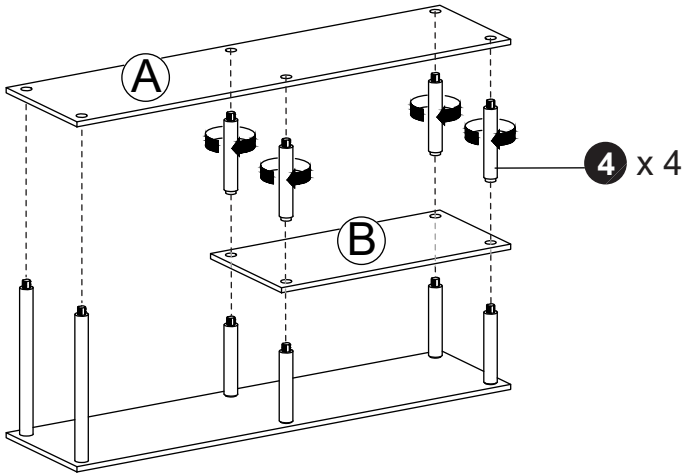

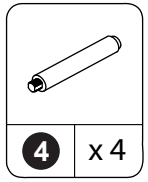

3

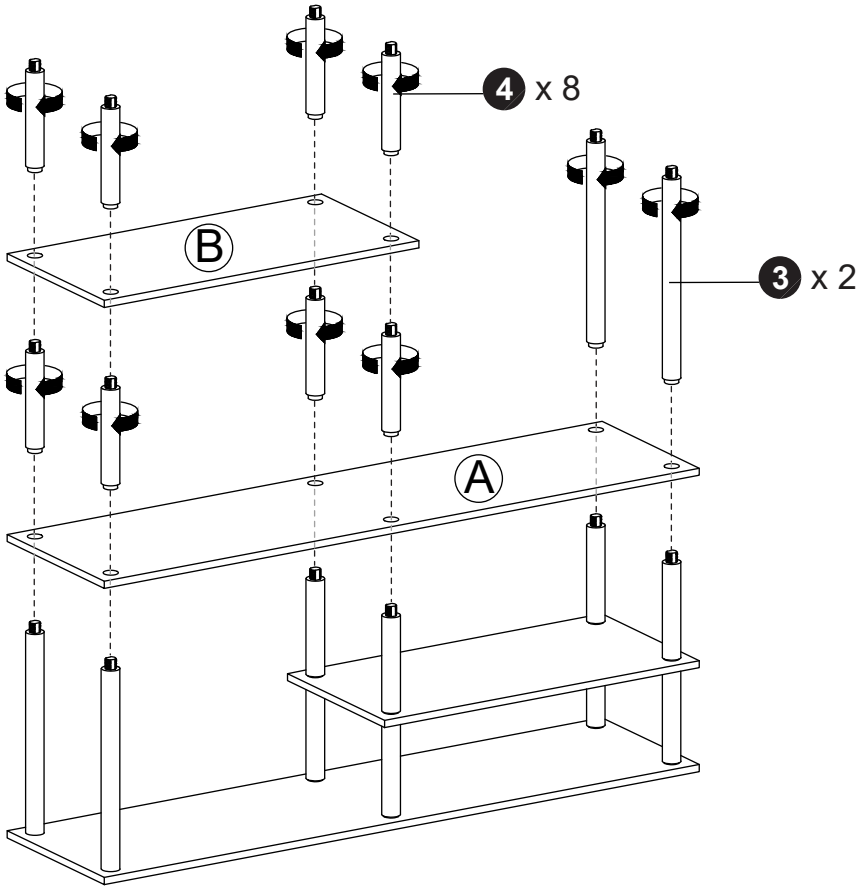

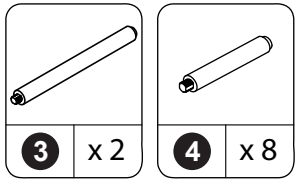

4

