3

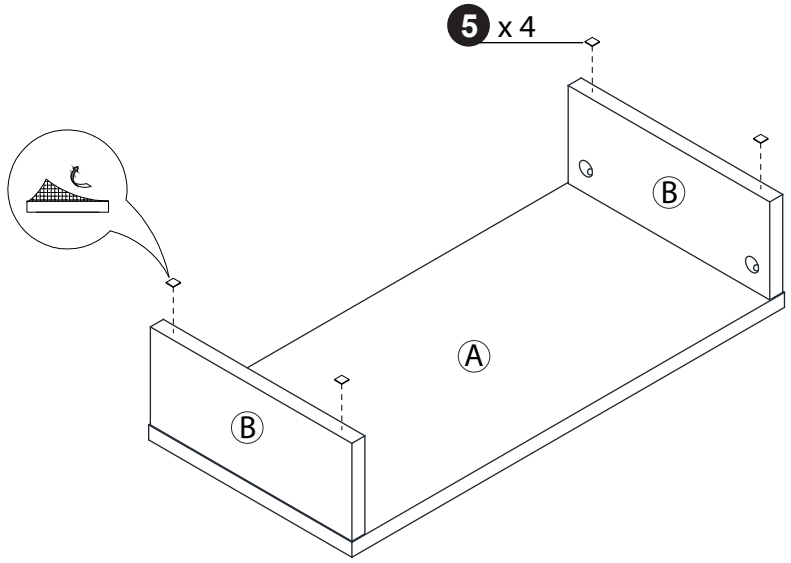

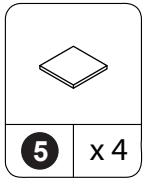

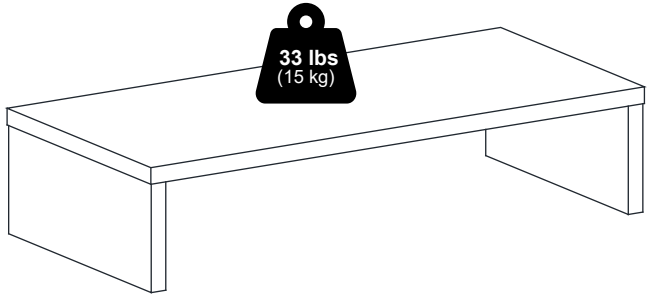





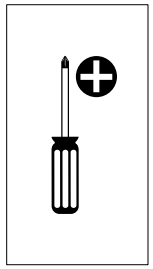

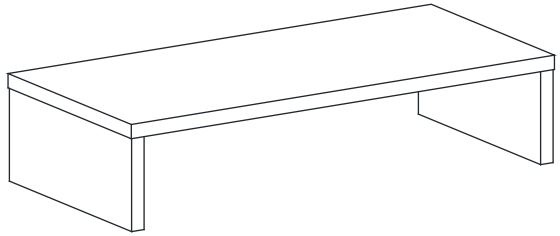

26286

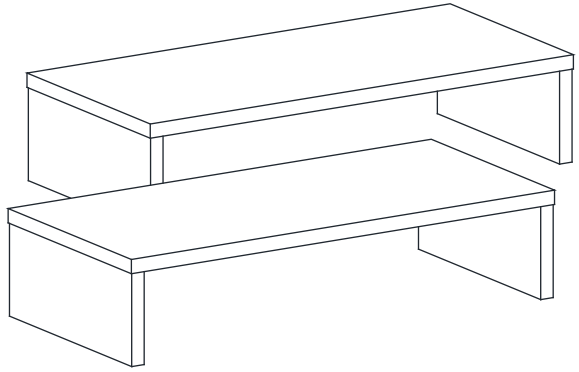

26287

MODEL: 26286 / 26287

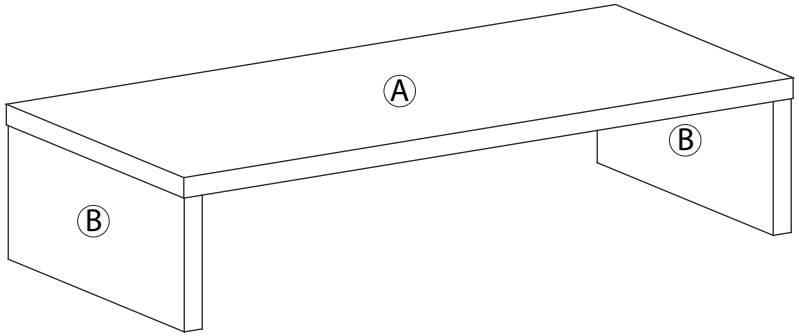

26286

1	2	3	4	5
x 4	x 4	x 4	x 4	x 4
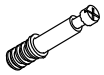		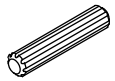 M5 x 30mm		

26287

1	2	3	4	5
x 8	x 8	x 8	x 8	x 8
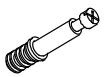		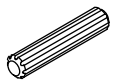 M5 x 30mm		

1

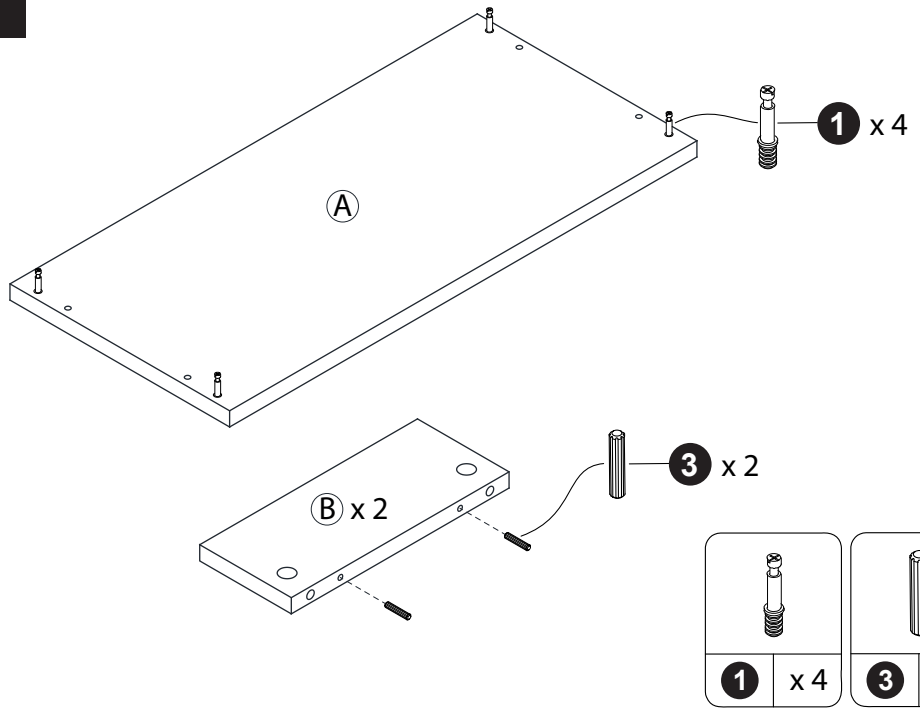

2

