3

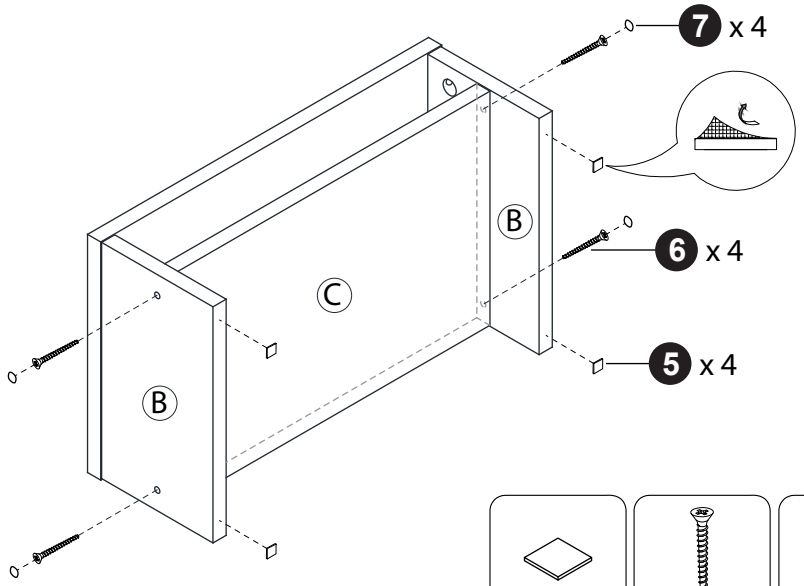

5 x 4	6 x 4	7 x 4



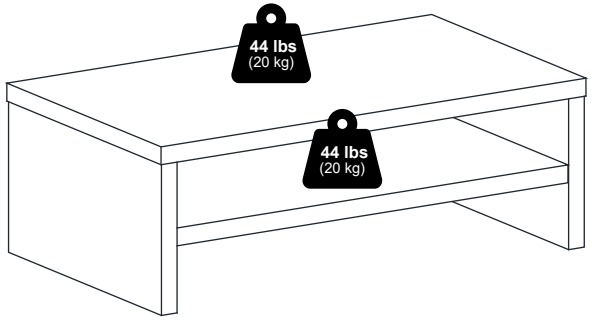





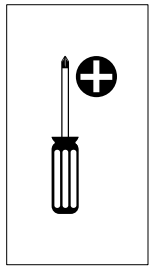

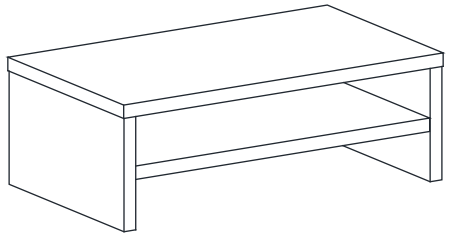

26293

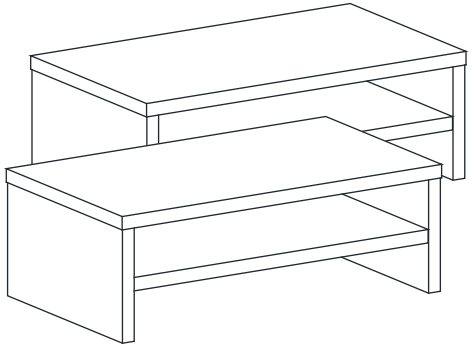

26294

MODEL: 26293 / 26294

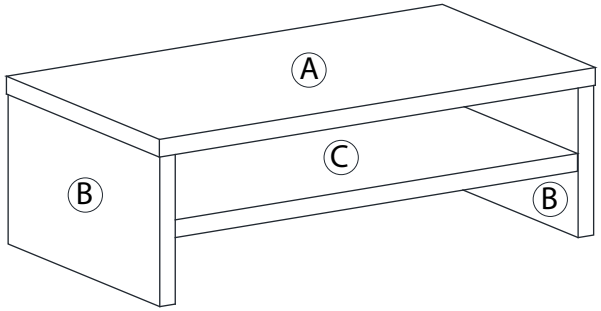

26293

1 x 4 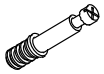	2 x 4 	3 x 4 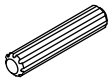 M5 x 30mm	4 x 4 
5 x 4 	6 x 4  M4 x 38mm	7 x 4 	

26294

1 x 8 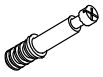	2 x 8 	3 x 8 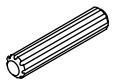 M5 x 30mm	4 x 8 
5 x 8 	6 x 8  M4 x 38mm	7 x 8 	

1

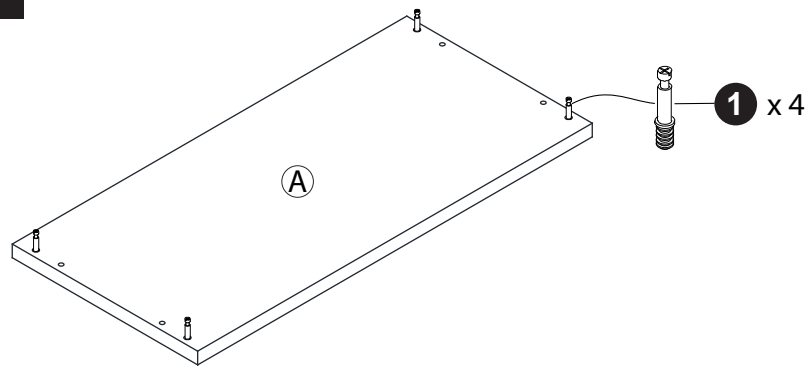

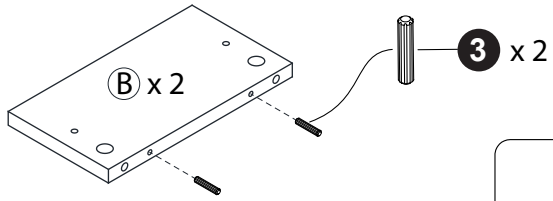

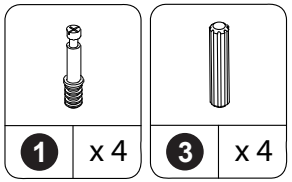

2

