STEP 4

3		20 pcs

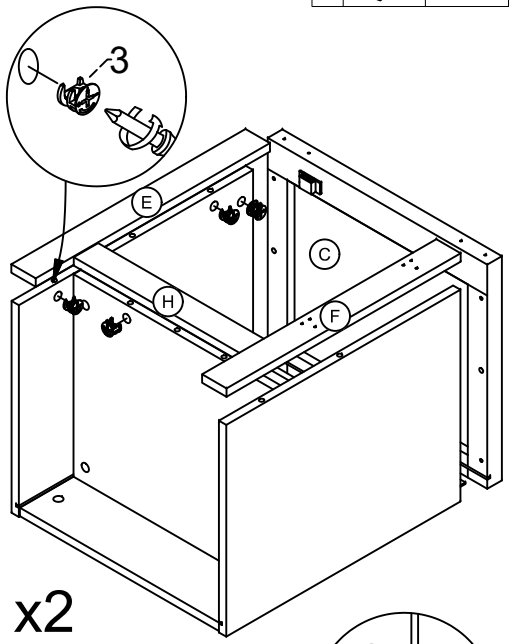

x2

STEP 5

5		8 pcs
7		8 pcs
12		8 pcs

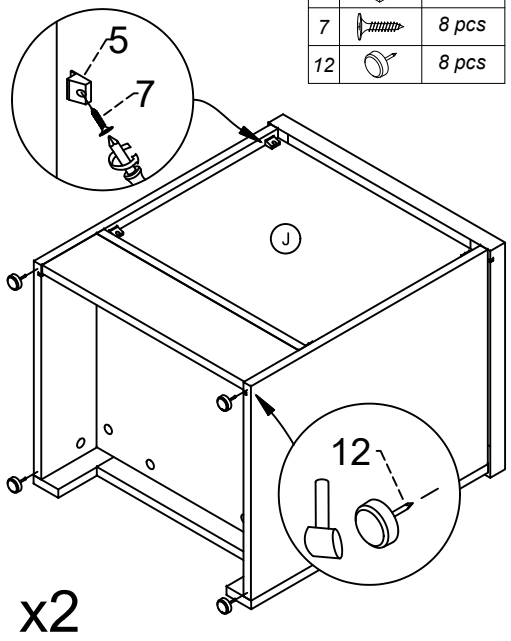

x2

STEP 6

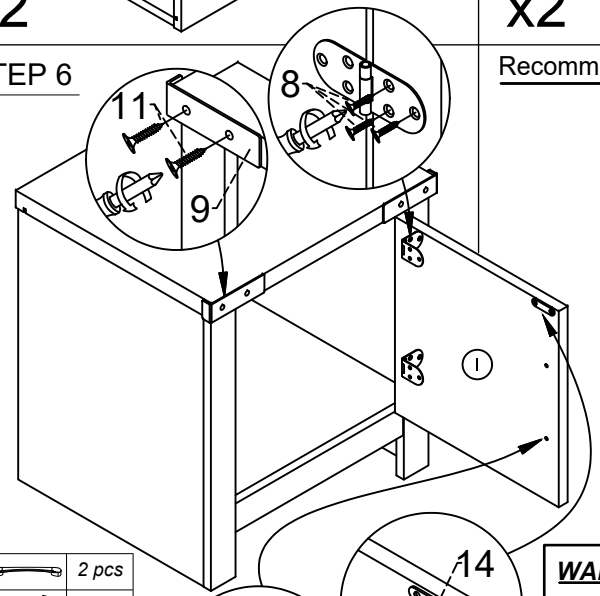

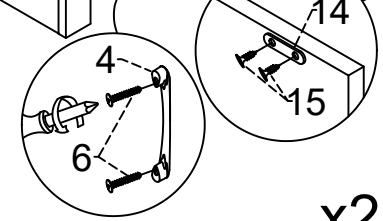

x2

4		2 pcs
6		4 pcs
8		12 pcs
9		4 pcs
11		8 pcs
14		2 pcs
15		4 pcs

Recommended Maximum Weight

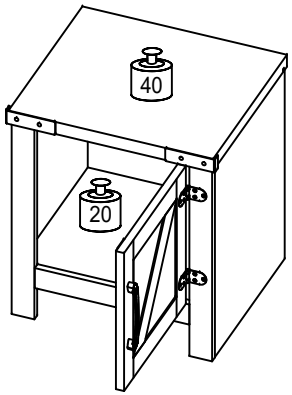

*Unit in Pound（lbs)

WARNING:

>This unit has been designed to support the maximum loads shown. Exceeding these load limits could cause sagging, instability, product collapse, and/or serious injury.

>DO NOT allow children to climb on unit.

>Put heavier items on lower shelves.

Furinno®

Fits Space, Fits Budget

Assembly Instruction

Furinno Farmhouse End Table (Set of 2)

MODEL : 2FH22002

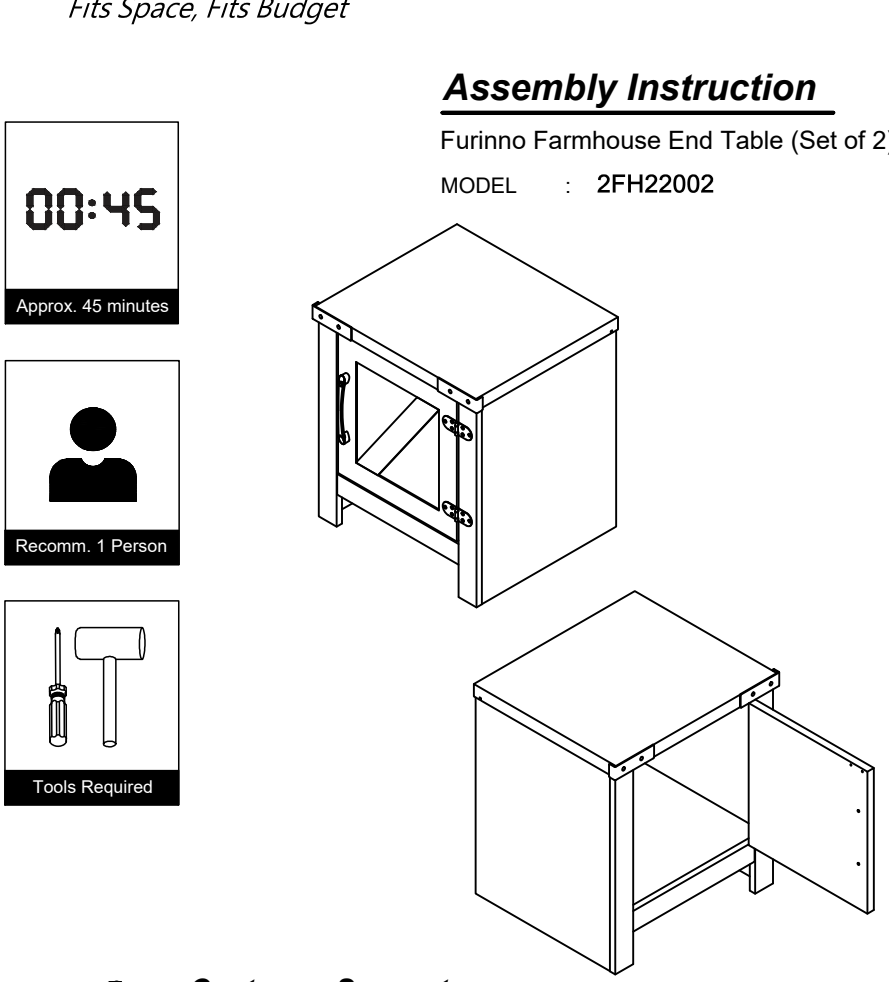

Customer Support

NEED HELP? For replacement requests or product inquiries, please contact our Customer Service Team by emailing us at support@furinno.com. Thank you for selecting Furinno!

www.furinno.com

2FH2200220220505

No	Hardware List	Qty
1	Dowel ⌀8x30mm	22pcs
2	Minifix Bolt	32pcs
3	Minifix Cam	32pcs
4	Handle 128mm	2pcs
5	192 Stub	8pcs
6	Handle Screw ⌀4x22mm	4pcs
7	Screw ⌀3.1x20mm	8pcs
8	Rattan Screw ⌀8x16mm	24pcs
9	Bracket (107x32x17mm)	4pcs
10	Flap Hinge	4pcs
11	Rattan Screw ⌀10x16mm	8pcs
12	PVC Nail with Pin	8pcs
13	Magnet	2pcs
14	Magnet Plate	2pcs
15	Screw ⌀3.5x16mm	4pcs

* All the hardware quantities are for two sets

No	Parts List	Qty
A	Left Side Panel	2pcs
B	Right Side Panel	2pcs
C	Top Panel	2pcs
D	Bottom Panel	2pcs
E	Left Bar Panel	2pcs
F	Right Bar Panel	2pcs
G	Back Bottom Panel	2pcs
H	Front Bottom Panel	2pcs
I	Door Panel	2pcs
J	Back Panel	2pcs

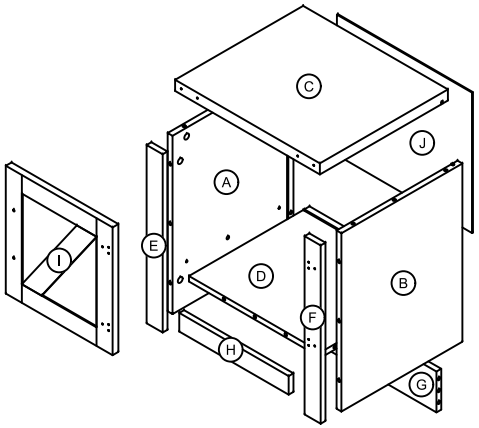

USEFUL HINTS BEFORE YOU START:

1. Read each step carefully before starting.
2. It is important that each step is performed in correct order to avoid difficulties.
3. Identify, sort and count the parts before assembly.
4. Assemble your furniture on packaging cardboard to prevent scratch or damage.
5. Clean the product with mild cleanser using soft damped cloth. Do not use harsh or abrasive cleanser.
6. Using uncompatible hardware might cause damage to product.

DO NOT FULLY TIGHTEN ANY BOLTS BEFORE ALL PARTS ARE LOOSELY ASSEMBLED. THE PRODUCT/ FITTINGS MAY BE DAMAGED IF OVERTIGHTENED. BEWARE OF CROSS THREADING SCREWS AND BOLTS DURINGS ASSEMBLY SMALL COMPONENT PARTS COULD CHOKE A CHILD IF SWALLOWED. WE STRONGLY RECOMMEND THAT YOU KEEP. CHILDREN AWAY FROM THE WORK AREA.

STEP 1

1		22 pcs
2		32 pcs
13		2 pcs

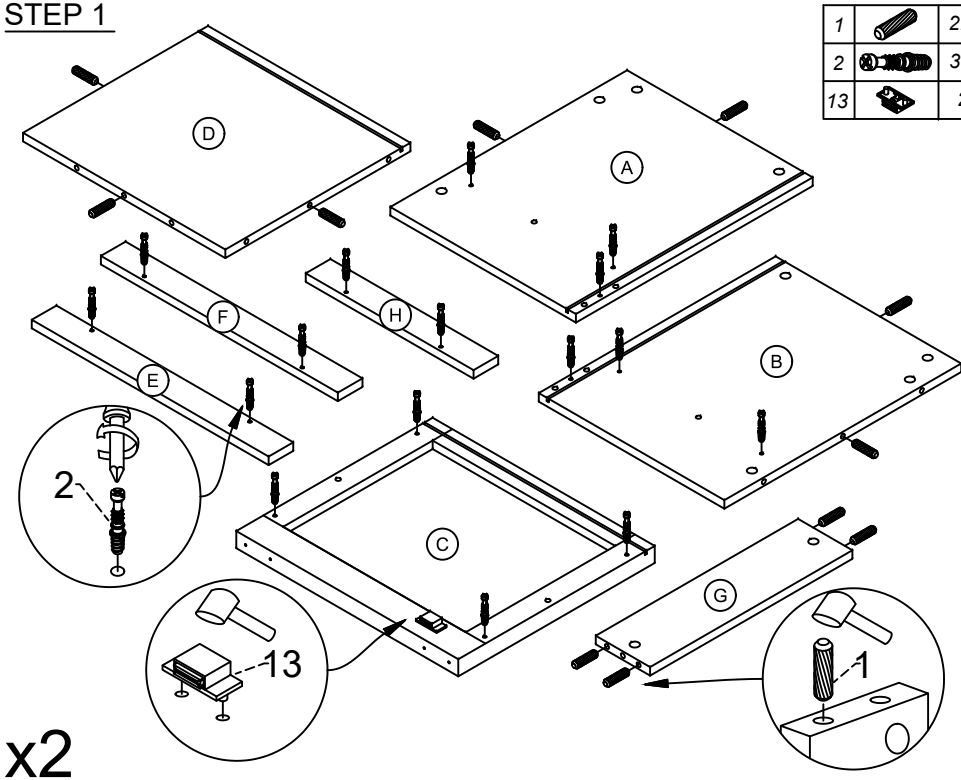

x2

STEP 2

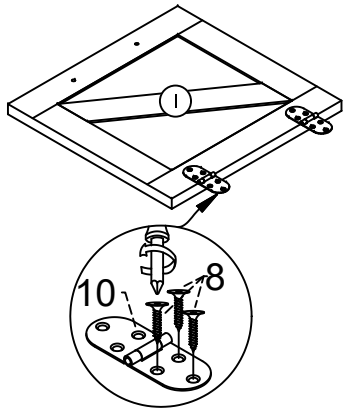

x2

8		12 pcs
10		4 pcs

STEP 3

x2

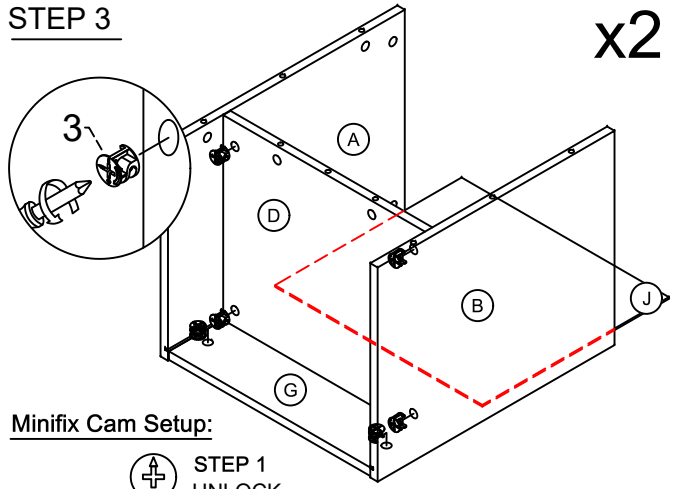

Minifix Cam Setup:

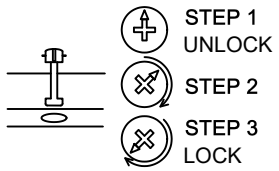

3		12 pcs