STEP 5

Install Caster (3) to the Bottom Panel (B) with Short Screw (4).

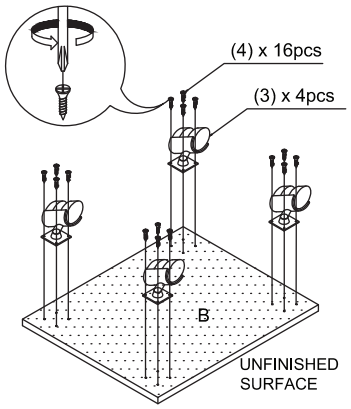

STEP 6

Attach both assembled unit in Step 4&5.

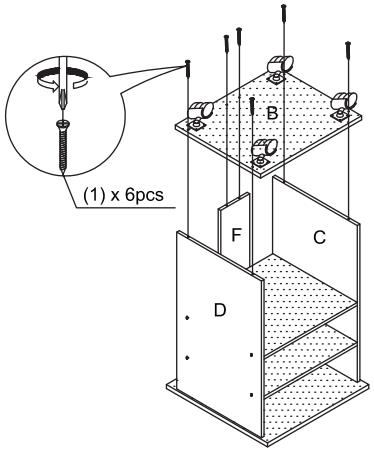

STEP 7

Unfold Bin (5&6) and insert to the unit.

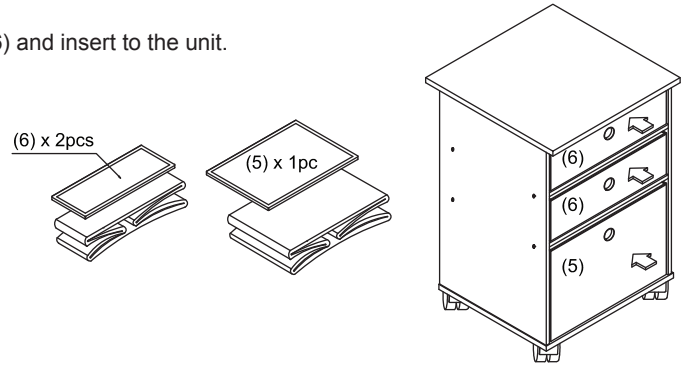

Recommended Maximum Weight

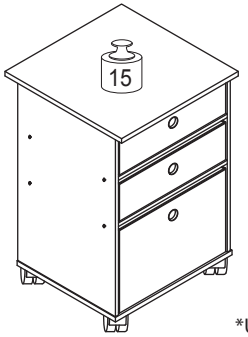

*Unit in Pound(lbs)

WARNING:

>This unit has been designed to support the maximum loads shown. Exceeding these load limits could cause sagging, instability, product collapse, and/or serious injury.

>DO NOT allow children to climb on unit.

>Put heavier items on lower shelves.

Furinno®
Fits Space. Fits Budget

Assembly Instruction

Furinno Econ Organizer with Bins and Mobility Casters

MODEL : **99182R3**

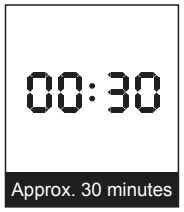





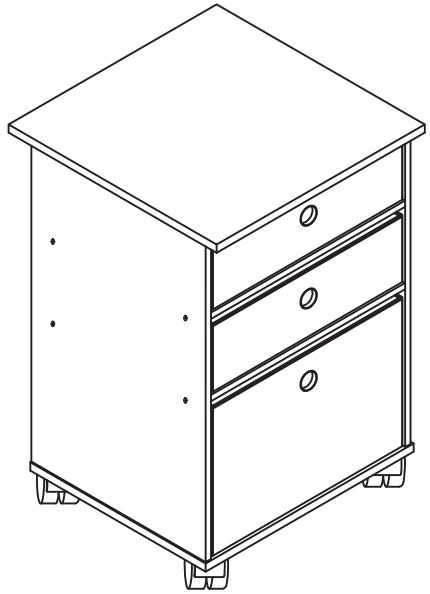

Customer Support

NEED HELP? For replacement requests or product inquiries, please contact our Customer Service Team by emailing us at **support@furinno.com**. Thank you for selecting Furinno!

www.furinno.com

No	Hardware List	Qty
1	Long Screw	14pcs
2	Dowel	6pcs
3	Caster	4pcs
4	Short Screw	16pcs
5	Big Non-Wooven Bin	1pc
6	Small Non-Wooven Bin	2pcs
7	White Glue	1pc

No	Parts List	Qty
A	Top Panel	1pc
B	Bottom Panel	1pc
C	Left Side Panel	1pc
D	Right Side Panel	1pc
E	Shelf Panel	2pcs
F	Back Panel	1pc

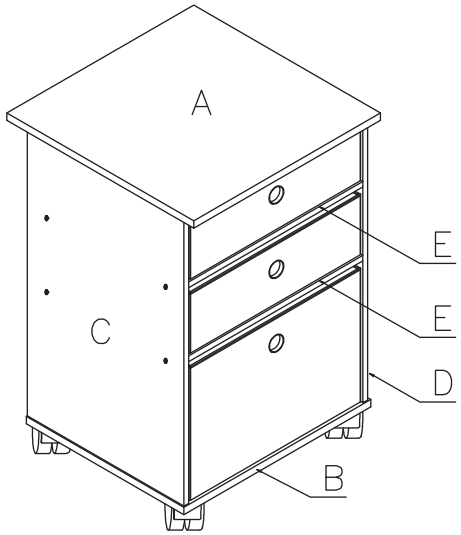

USEFUL HINTS BEFORE YOU START:

1. Read each step carefully before starting.
2. It is important that each step is performed in correct order to avoid difficulties.
3. Identify, sort and count the parts before assembly.
4. Assemble your furniture on packaging cardboard to prevent scratch or damage.
5. Clean the product with mild cleanser using soft damped cloth. Do not use harsh or abrasive cleanser.
6. Using uncompatible hardware might cause damage to product.

STEP 1

Insert Dowel (2) into Panel (C, D&F) with White Glue (7).

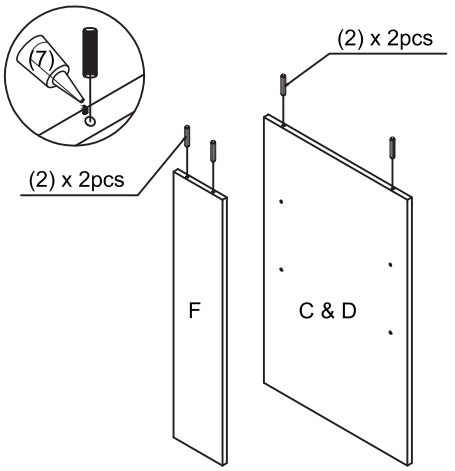

STEP 2

Attach Panel (C&D) to Panel (A), as shown.

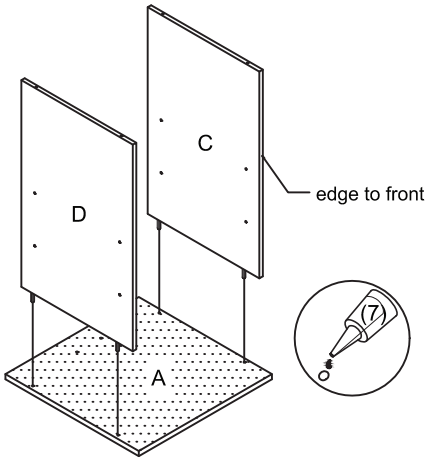

UNFINISHED SURFACE

STEP 3

Attach Shelf Panel (E) to Panel (C&D) with Long Screw (1).

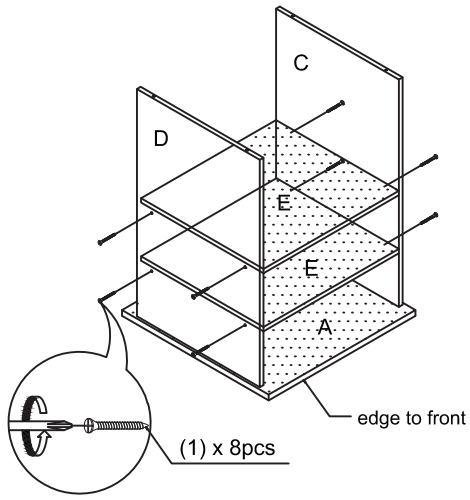

STEP 4

Attach Panel (F) to Panel (A), as shown.

