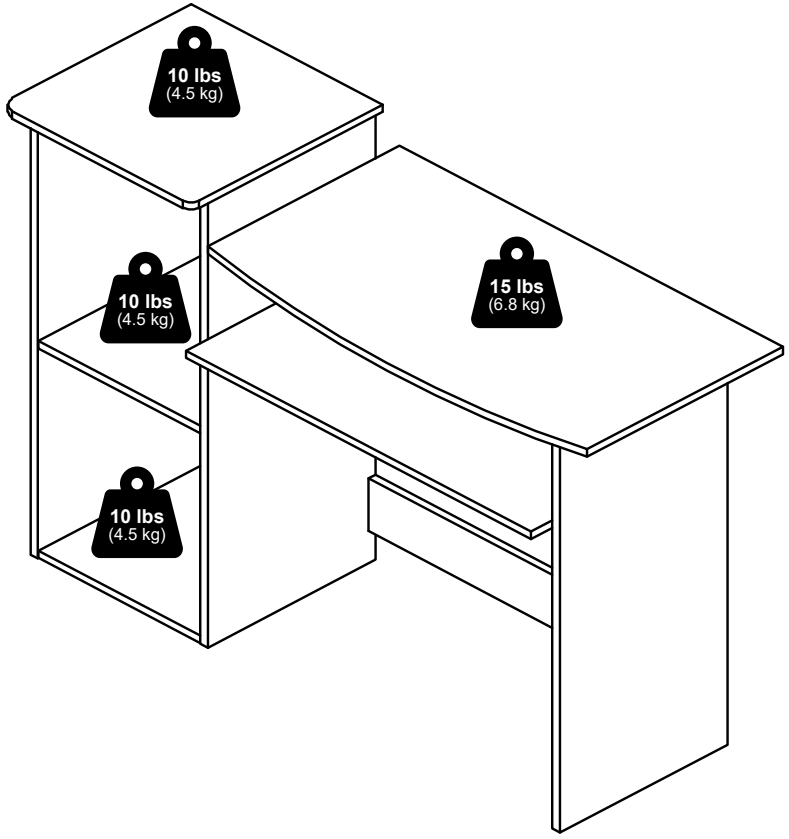

Furinno®

Fits Space, Fits Budget



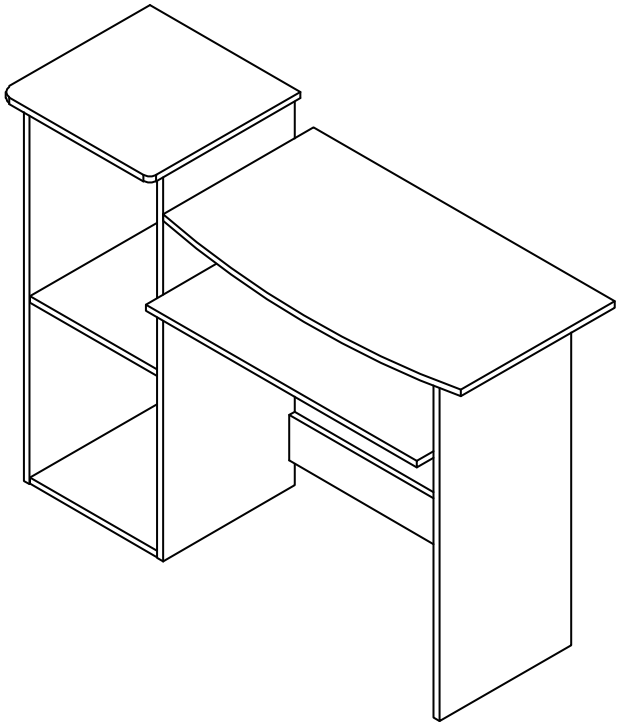

MODEL: 99914

support@furinno.com

www.furinno.com

9991420230524

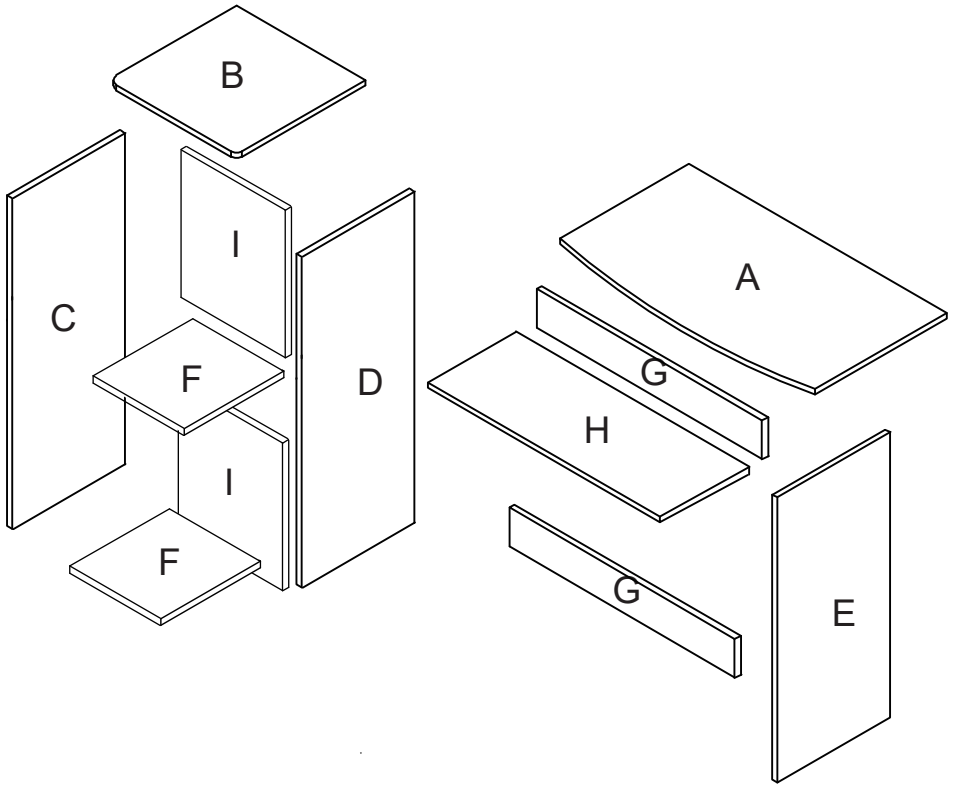

1 x 18  M4 x32mm	2 x 6  M6 X 20mm	3 x 6  10mm	4 x 6  15mm
5 x 6 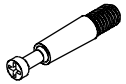 M6 X 31mm	6 x 16 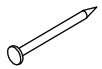 2.5 x 18mm	7 x 1 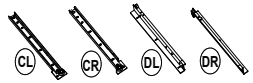	8 x 8  M3.5 x10mm

9 x 1 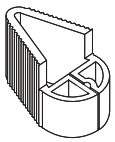

9

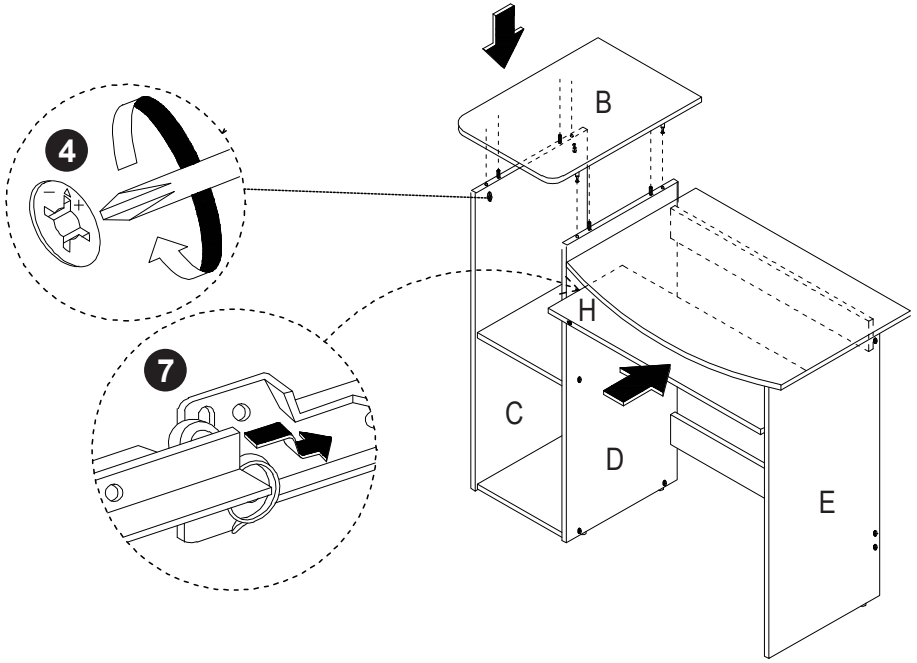

7

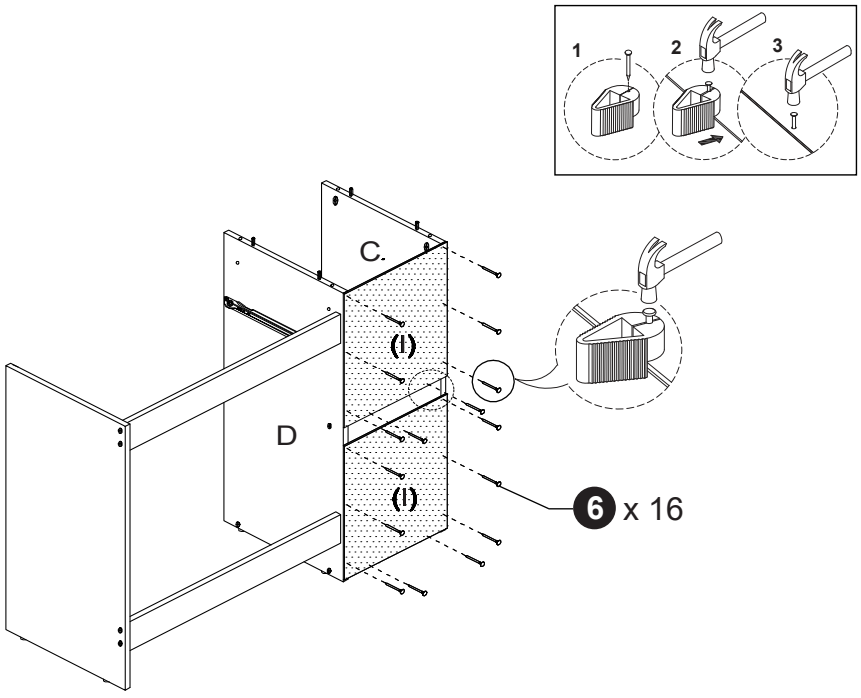
1
2
3
C.
(I)
D
(I)
6 x 16

8

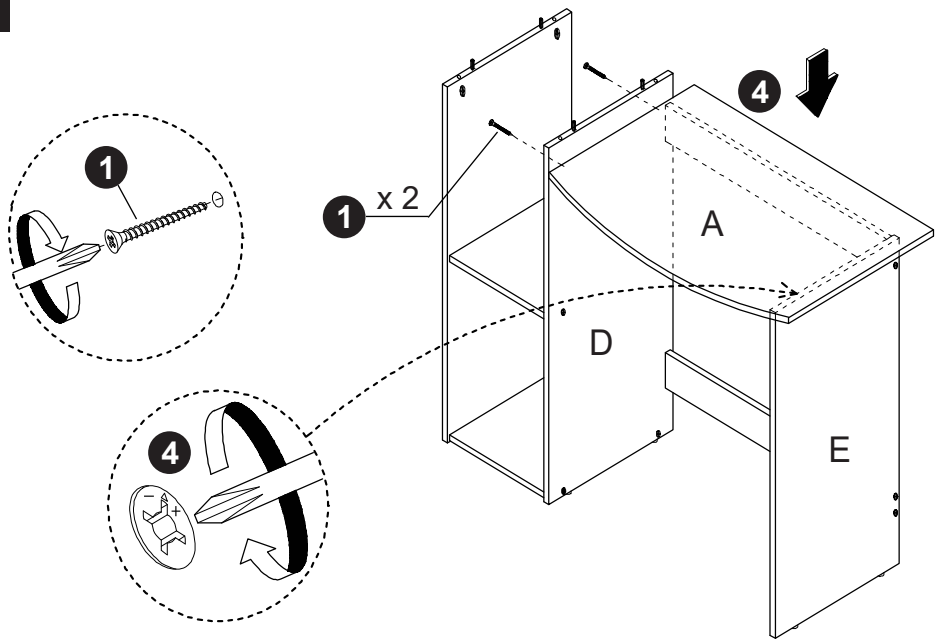
1
1 x 2
4
A
D
E
4

1

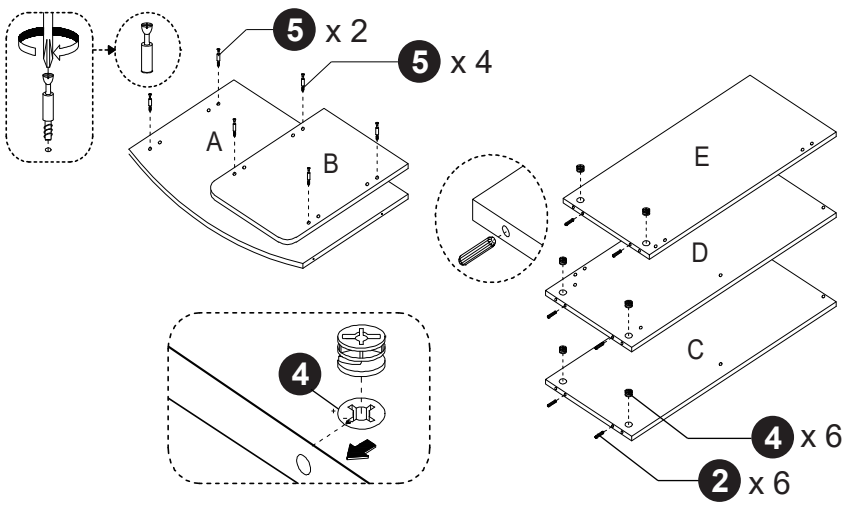
5 x 2
5 x 4
A
B
E
D
C
4
4 x 6
2 x 6

2

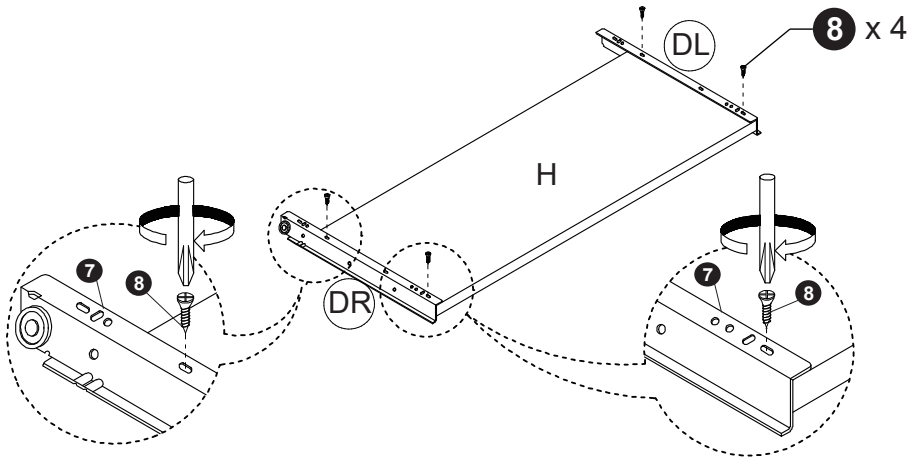
DL
8 x 4
H
7
8
DR
7
8

3

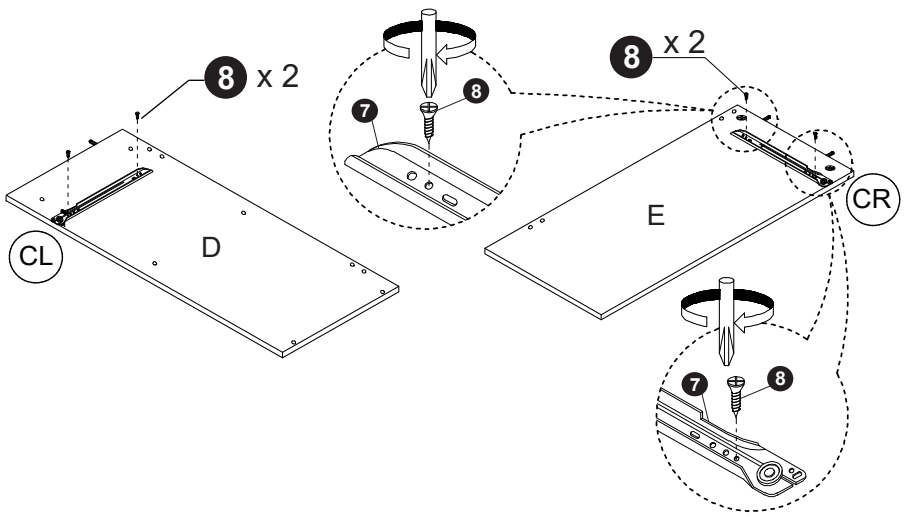

4

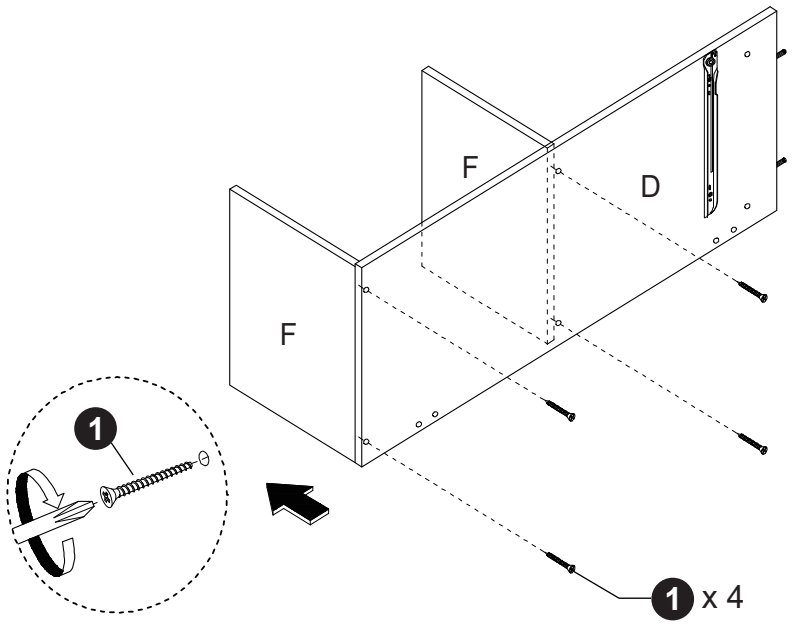

5

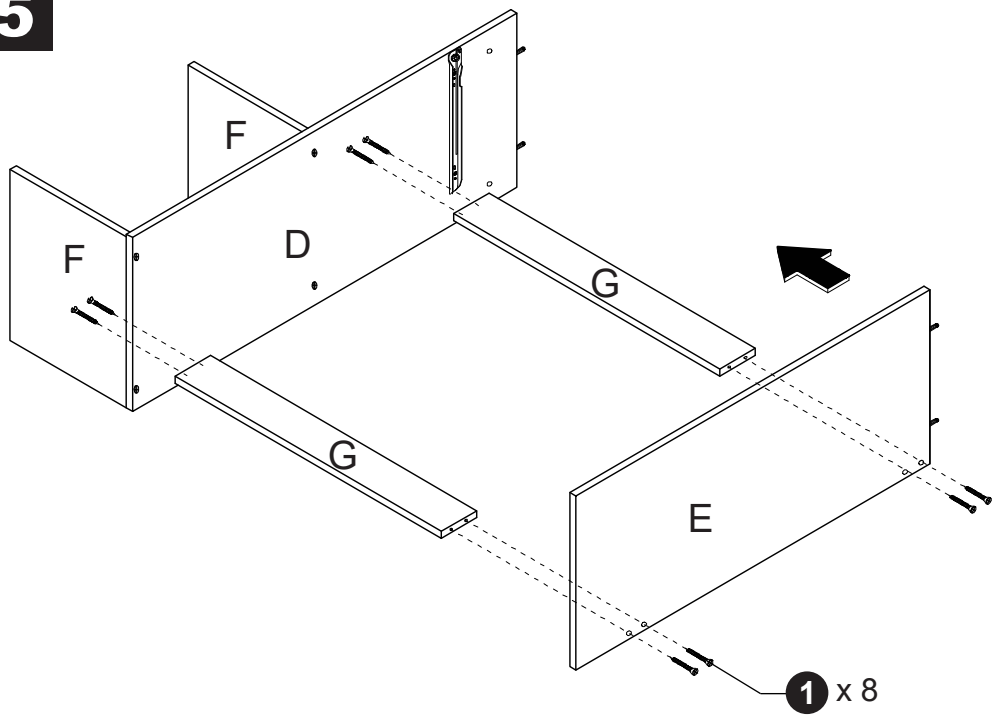

6

