STEP 5

5.1 TIGHTEN WITH SCREW (1) TO SIDE PANEL (B), SHELF PANEL (C) AND BOTTOM PANEL (E).
5.2 INSTALL NAIL LEG (7) TO THE BOTTOM OF SIDE PANEL (B) WITH HAMMER.

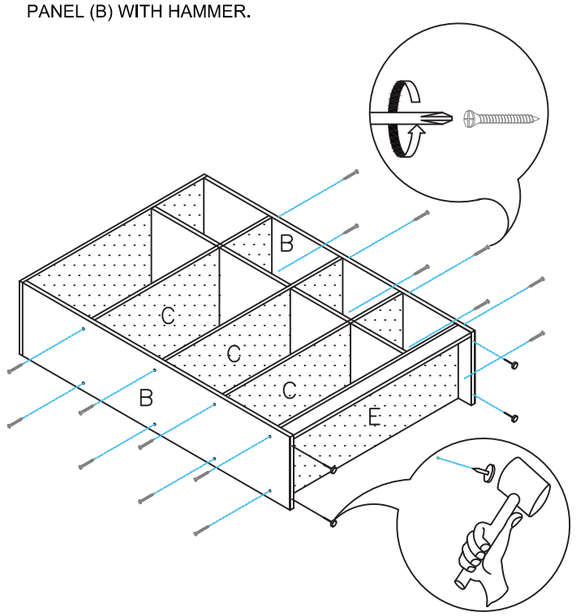

STEP 6

ATTACH BACK PANEL (G) TO THE REAR POSITION OF STORAGE WITH POWER PIN (5), AS SHOWN.

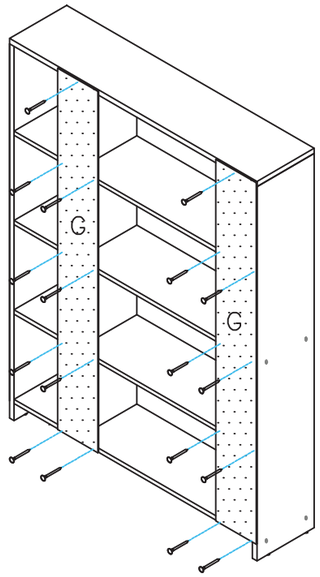

STEP 7

UNFOLD THE BIN (8)(9) AND SLIDE IT IN THE STORAGE.

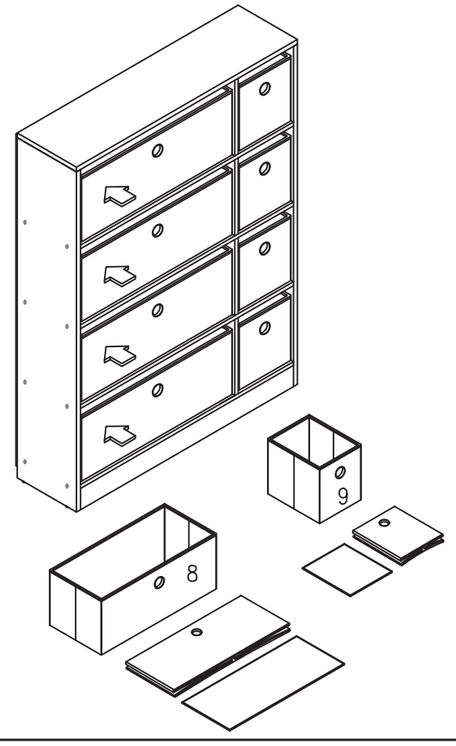

Recommended Maximum Weight

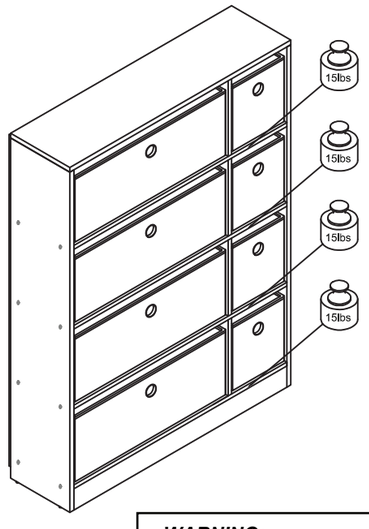

WARNING:

>This unit has been designed to support the maximum loads shown. Exceeding these load limits could cause sagging, instability, product collapse, and/or serious injury.

>DO NOT allow children to climb on unit.

>Put heavier items on lower shelves.

Furinno®
Fits Space. Fits Budget

Assembly Instruction

Furinno Multi Purpose Storage Shelf
MODEL : **99998 R4** (13089)



Approx. 30 minutes


Recomm. 2 Persons

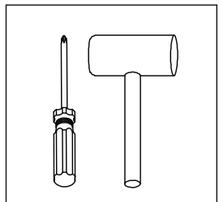
Tools Required

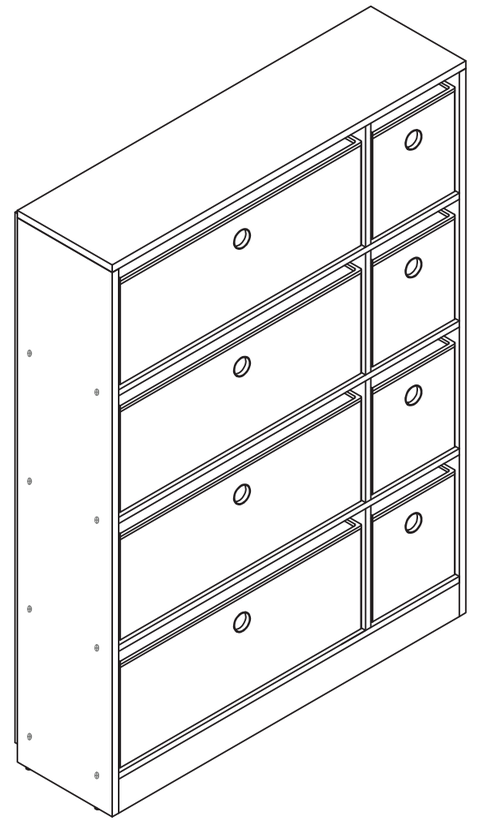

Customer Support

NEED HELP? For replacement requests or product inquiries, please contact our Customer Service Team by emailing us at **support@furinno.com**. Thank you for selecting Furinno!

www.furinno.com

99998R4(13089)20181022

NO	HARDWARE LIST	QTY
1	CHIPBOARD SCREW	16 pcs
2	CHIPBOARD SCREW	4 pcs
3	LONG DOWEL	4 pcs
4	SHORT DOWEL	16 pcs
5	POWER PIN	18 pcs
6	L-BRACKET	2 pcs
7	NAIL LEG	4 pcs
8	BIG BIN (RING HANDLE)	4 pcs
9	SMALL BIN (RING HANDLE)	4 pcs
10	WHITE GLUE	1 pc

NO	PARTS LIST	QTY
A	TOP PANEL	1 pc
B	SIDE PANEL	2 pcs
C	SHELF PANEL	3 pcs
D	CENTER PANEL	4 pcs
E	BOTTOM PANEL	1 pc
F	SKIT PANEL	1 pc
G	BACK PANEL	2 pcs

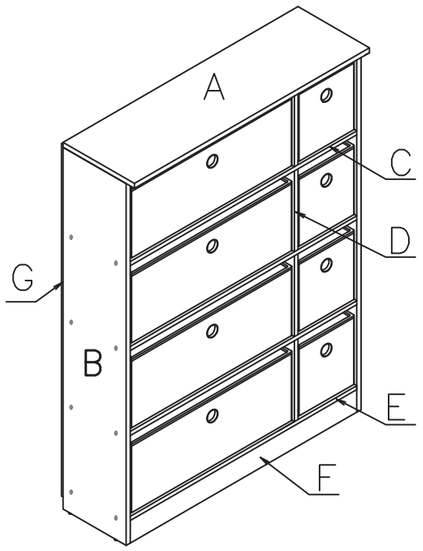

USEFUL HINTS BEFORE YOU START:

1. Read each step carefully before starting.
2. It is important that each step is performed in correct order to avoid difficulties.
3. Identify, sort and count the parts before assembly.
4. Assemble your furniture on packaging cardboard to prevent scratch or damage.
5. Clean the product with mild cleanser using soft damped cloth. Do not use harsh or abrasive cleanser.
6. Using uncompatible hardware might cause damage to product.

ASSEMBLY INSTRUCTION

STEP 1

1.1 INSERT DOWEL (3) TO SIDE PANEL (B) WITH GLUE (10).

1.2 INSERT DOWEL (4) TO CENTER PANEL (D) WITH GLUE (10).

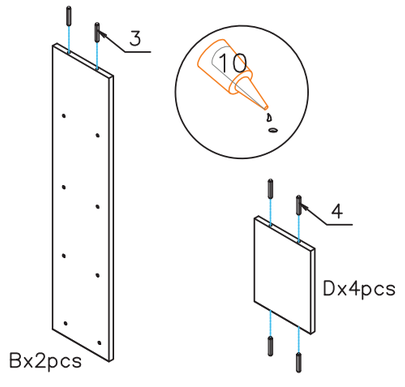

STEP 2

2.1 INSTALL L-BRACKET (6) WITH SCREW (2) TO SKIT PANEL (F). **FOLLOW THE MARKING**

2.2 ATTACH SKIT PANEL (F) TO BOTTOM PANEL (E) WITH SCREW (2). TIGHTEN THE L-BRACKET (6).

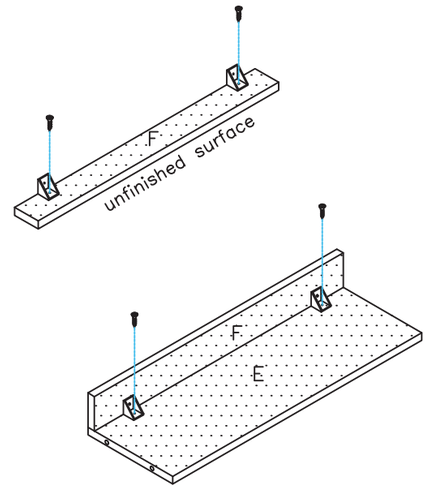

STEP 3

ATTACH CENTER PANEL (D) TO THE PANEL (A)(C)(E) WITH GLUE (10).

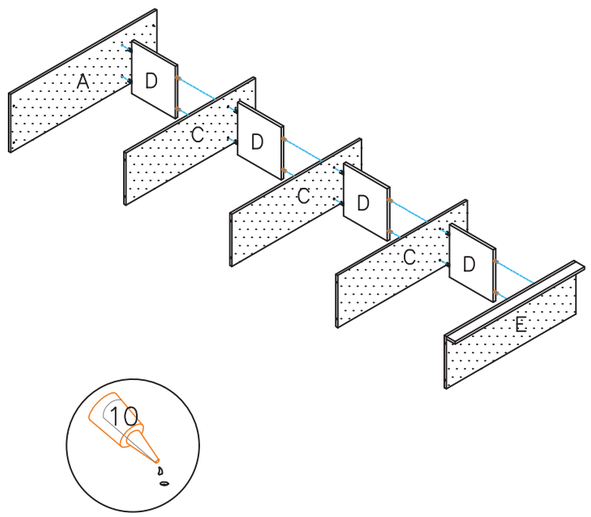

STEP 4

ATTACH SIDE PANEL (B) TO ASSEMBLED OF STEP 3 WITH GLUE (10).

