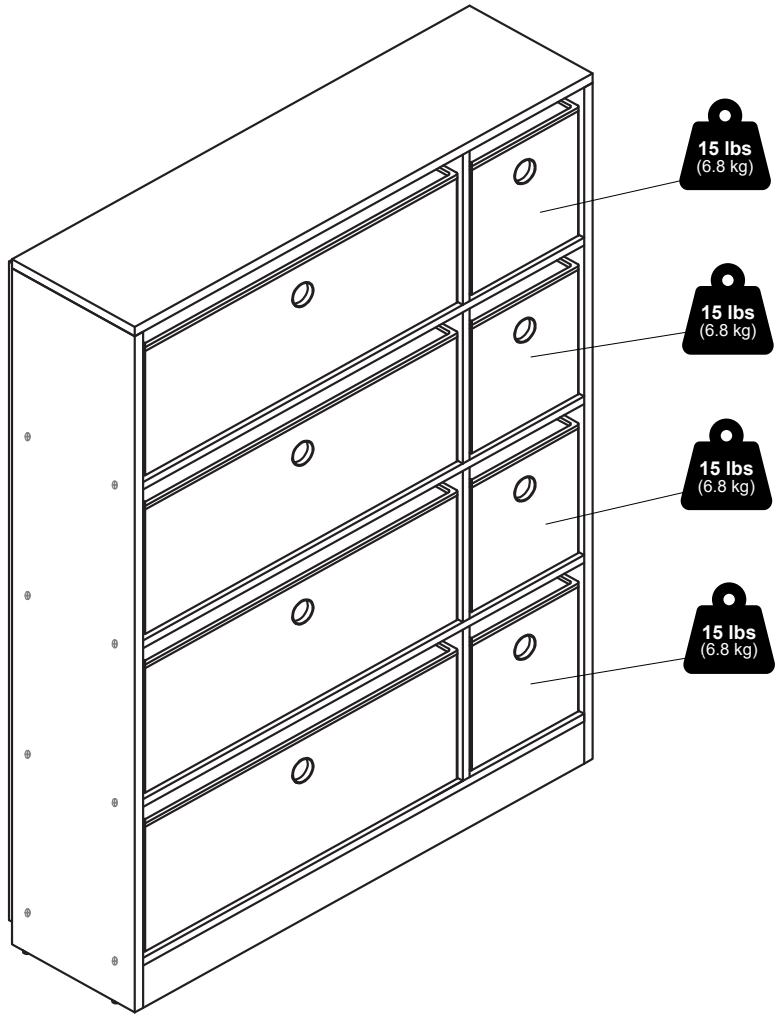

Furinno®

Fits Space, Fits Budget



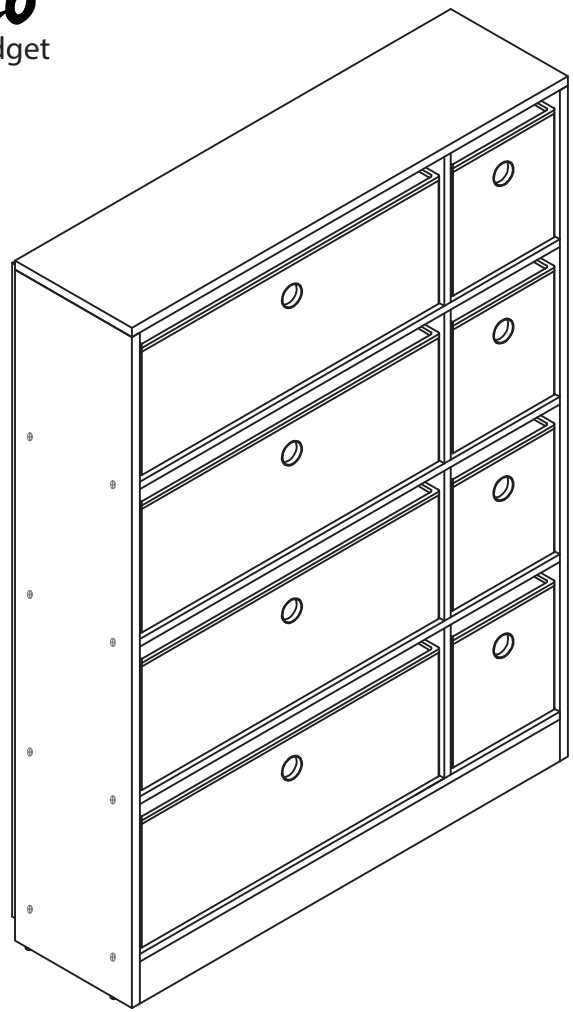

MODEL: 99998 R4 (13089)

support@furinno.com

www.furinno.com

99998R4(13089)20230524

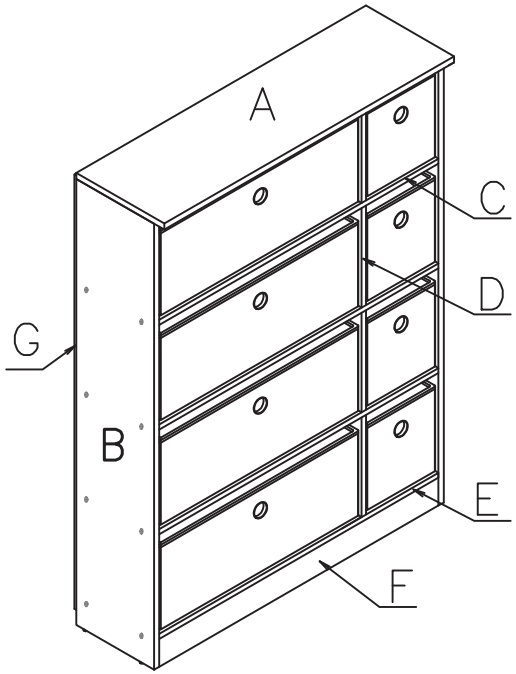

1 x 16  M4 x 32mm	2 x 4  M3.5 x 10mm	3 x 4  M6 x 30mm	4 x 16  M6 x 20mm
5 x 18  2.5 x 18mm	6 x 2  17 x 22mm	7 x 4  10mm	8 x 4 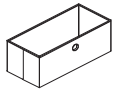
9 x 4 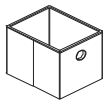	10 x 1 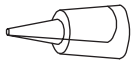	11 x 1 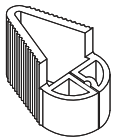	

7

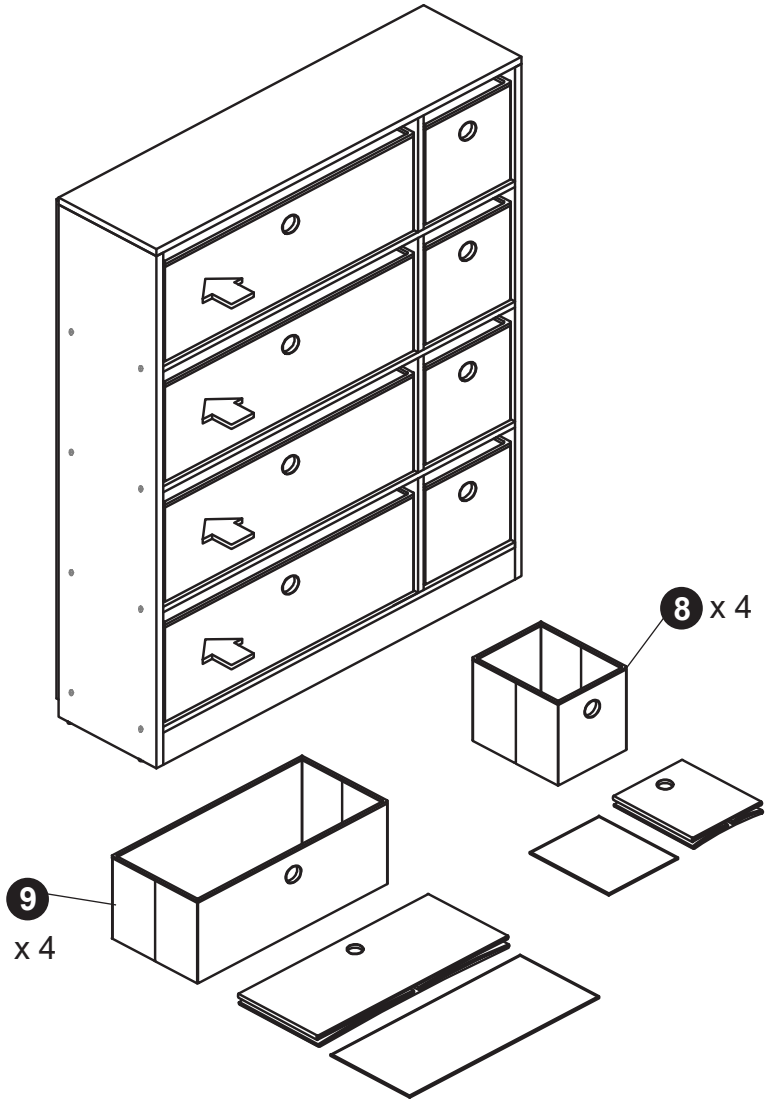

5

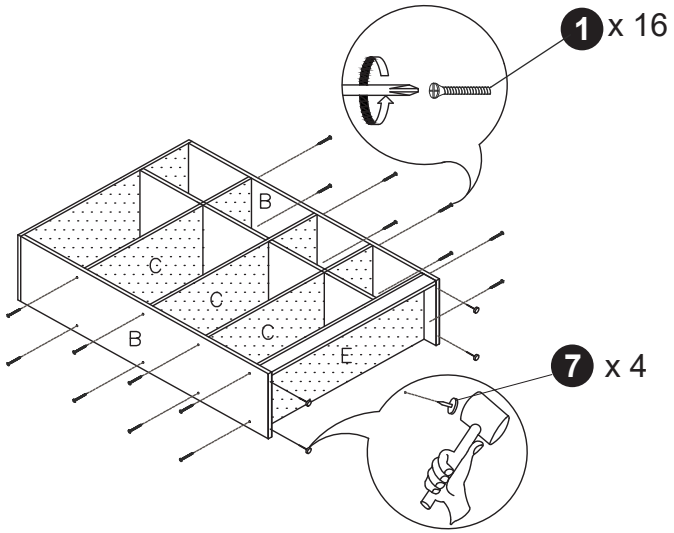

6

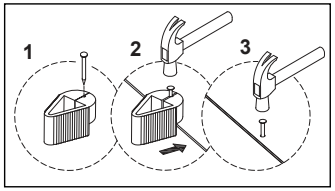

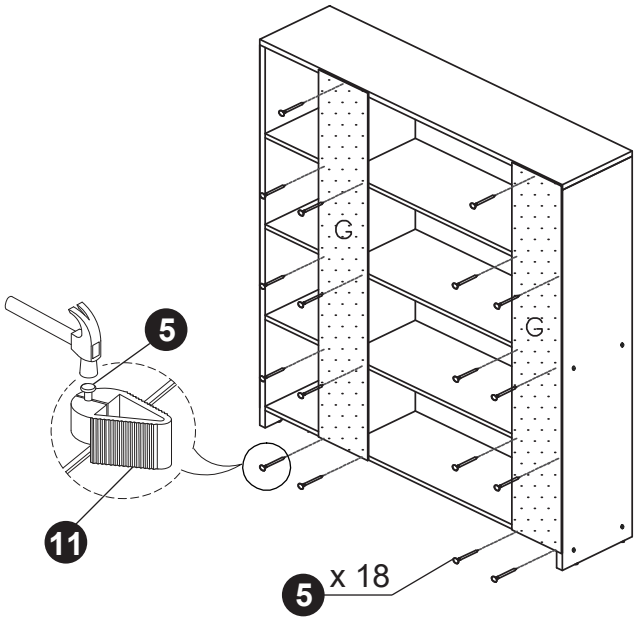

1

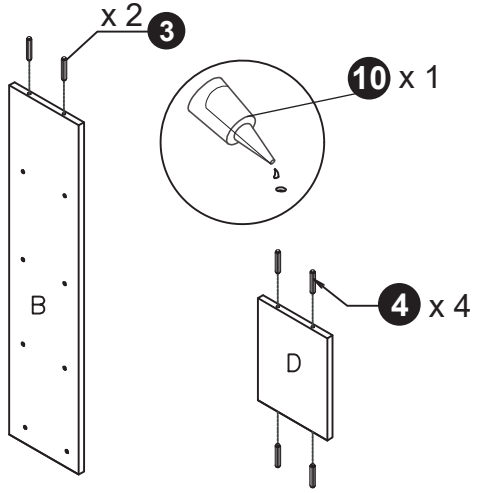

2

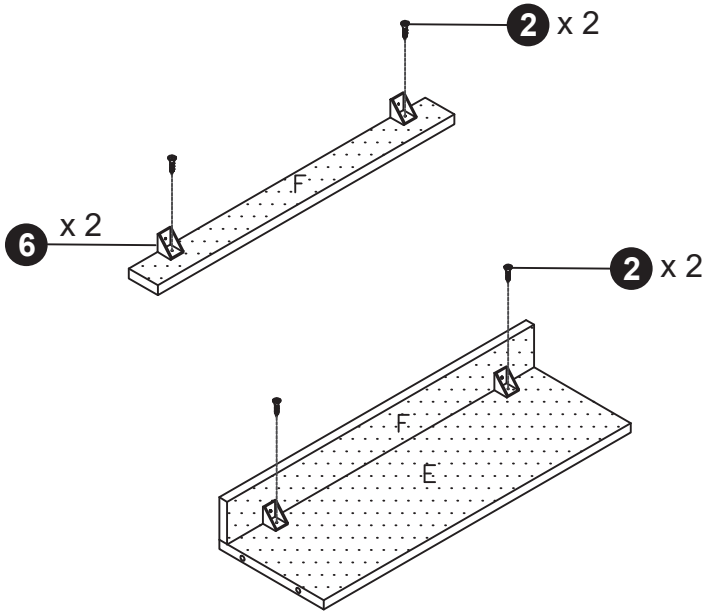

3

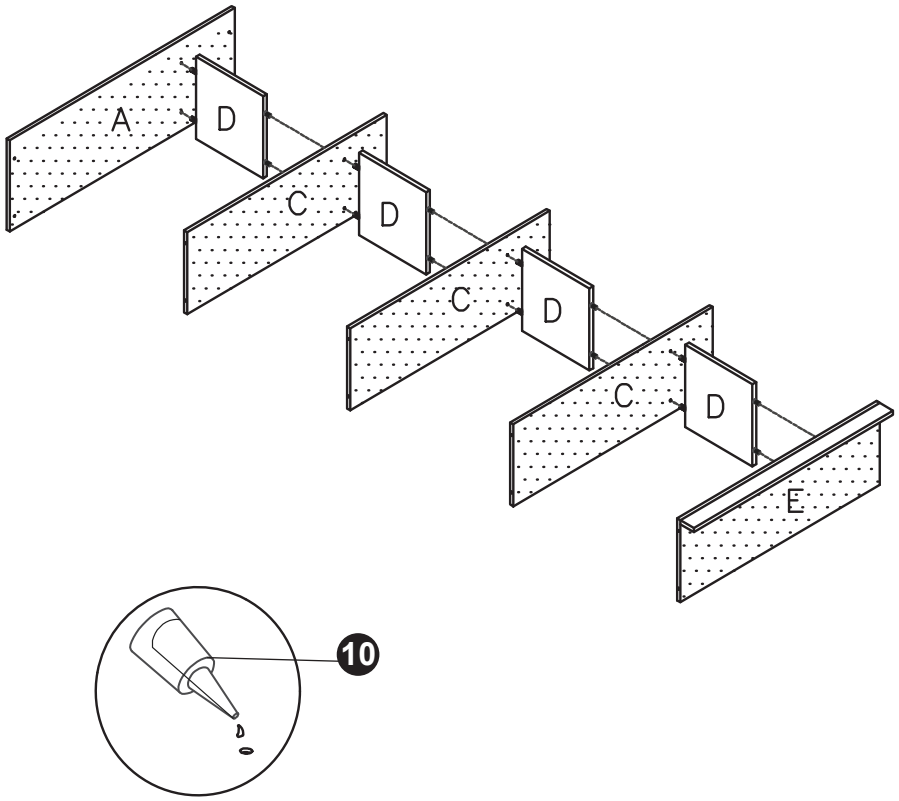

4

