Recommended Maximum Weight

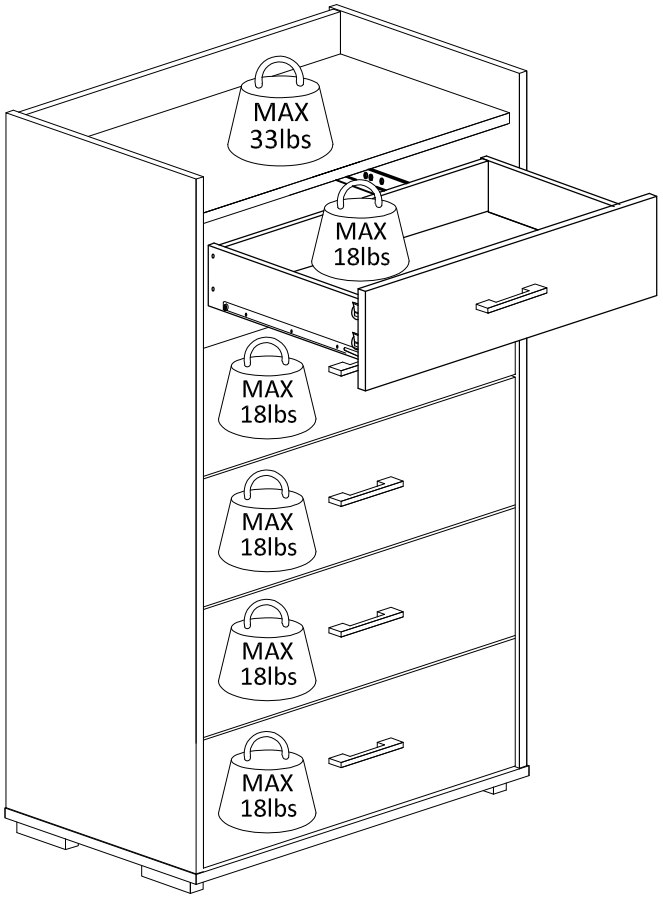

*Unit in Pound(lbs.)

WARNING

> This unit has been designed to support the maximum loads shown. Exceeding these load limits could cause sagging, instability, product collapse, and/or serious injury.

> DO NOT allow children to climb on unit.

> Put heavier items on lower shelves.

Furinno®

Fits Space, Fits Budget







Assembly Instruction

Furinno 5 Drawer Dresser

MODEL : EB22002

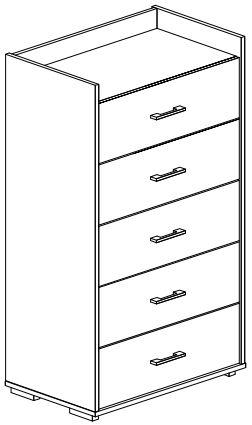

Customer Support

NEED HELP? For replacement requests or product inquiries, please contact our Customer Service Team by emailing us at **support@furinno.com.** Thank you for selecting Furinno!

www.furinno.com

HARDWARE & PARTS LIST

NO	HARDWARE LIST	QTY
1	WOOD DOWEL	37
2	GLUE	1
3	BACKPLY STOPPER	4
4	SCREW M3 X 20MM	4
5	HANDLE	5
6	SCREW M4 X 19MM	10
7	ANTI TIPPING SET	2
8	SCREW M5 X 30MM	10
9	PROFILE LEG	5
10	DRIVE FASTENER	30

NO	PART LIST	QTY
A	SIDE PANEL RIGHT	1
B	SIDE PANEL LEFT	1
C	TOP PANEL	1
D	BOTTOM PANEL	1
E	BACK SUPPORT	1
F	BACK PANEL	2
G	CENTRE SUPPORT	2
H	DRAWER COVER	5
I	DRAWER BACK PANEL	5
J	DRAWER BOTTOM SUPPORT	5
K	DRAWER SIDE PANEL LEFT	5
L	DRAWER SIDE PANEL RIGHT	5
M	TOP CROSSBAR	1
N	DRAWER BOTTOM PANEL	5

USEFUL HINTS BEFORE YOU START:

1. Read each step carefully before starting.

2. It is important that each step is performed in correct order to avoid difficulties.

3. Identify, sort and count the parts before assembly.

4, Assemble your furniture on packaging cardboard to prevent scratch or damage.

5. Clean the product with mild cleanser using soft damped cloth. Do not use harsh or abrasive cleanser.

6. Using uncompatible hardware might cause damage to product.

STEP 16

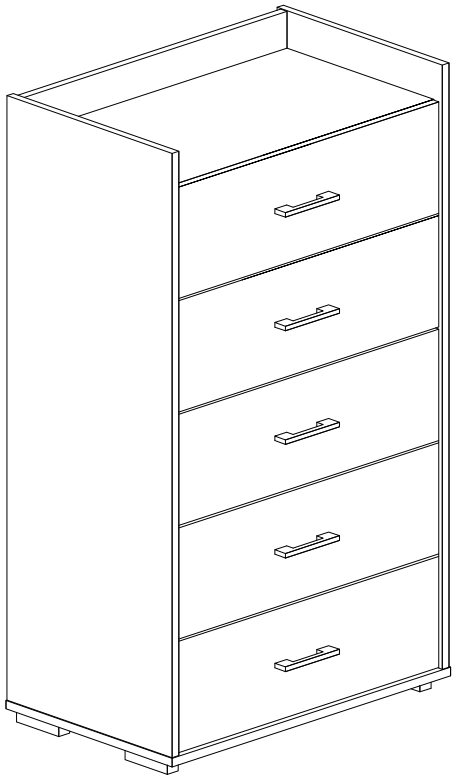

STEP 14

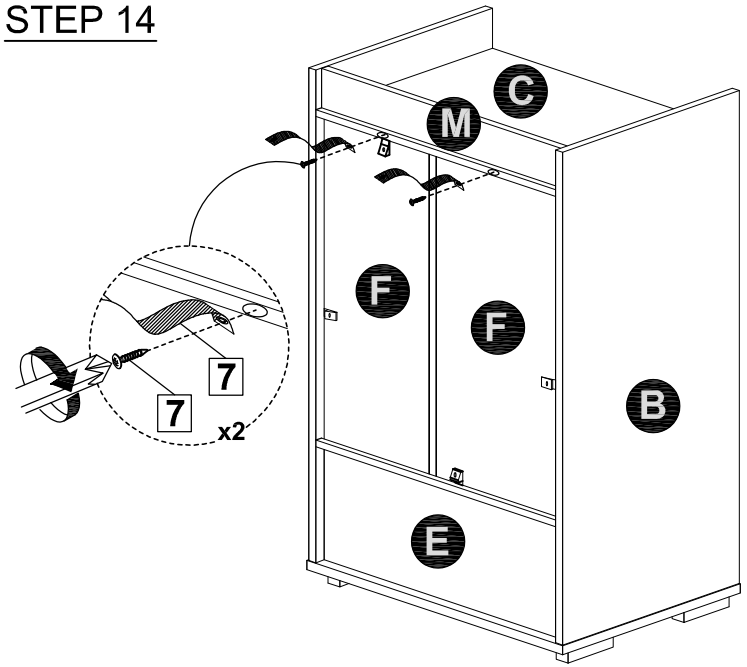

STEP 15

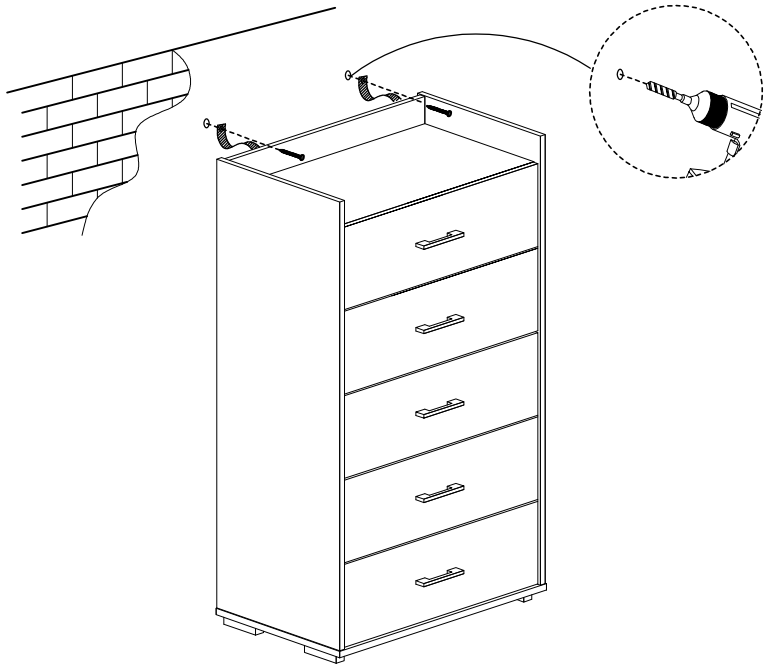

ASSEMBLY INSTRUCTIONS

BEFORE YOU BEGIN, PLEASE READ ASSEMBLY INSTRUCTION CAREFULLY, FOLLOW THEM STEP BY STEP.

STEP 1

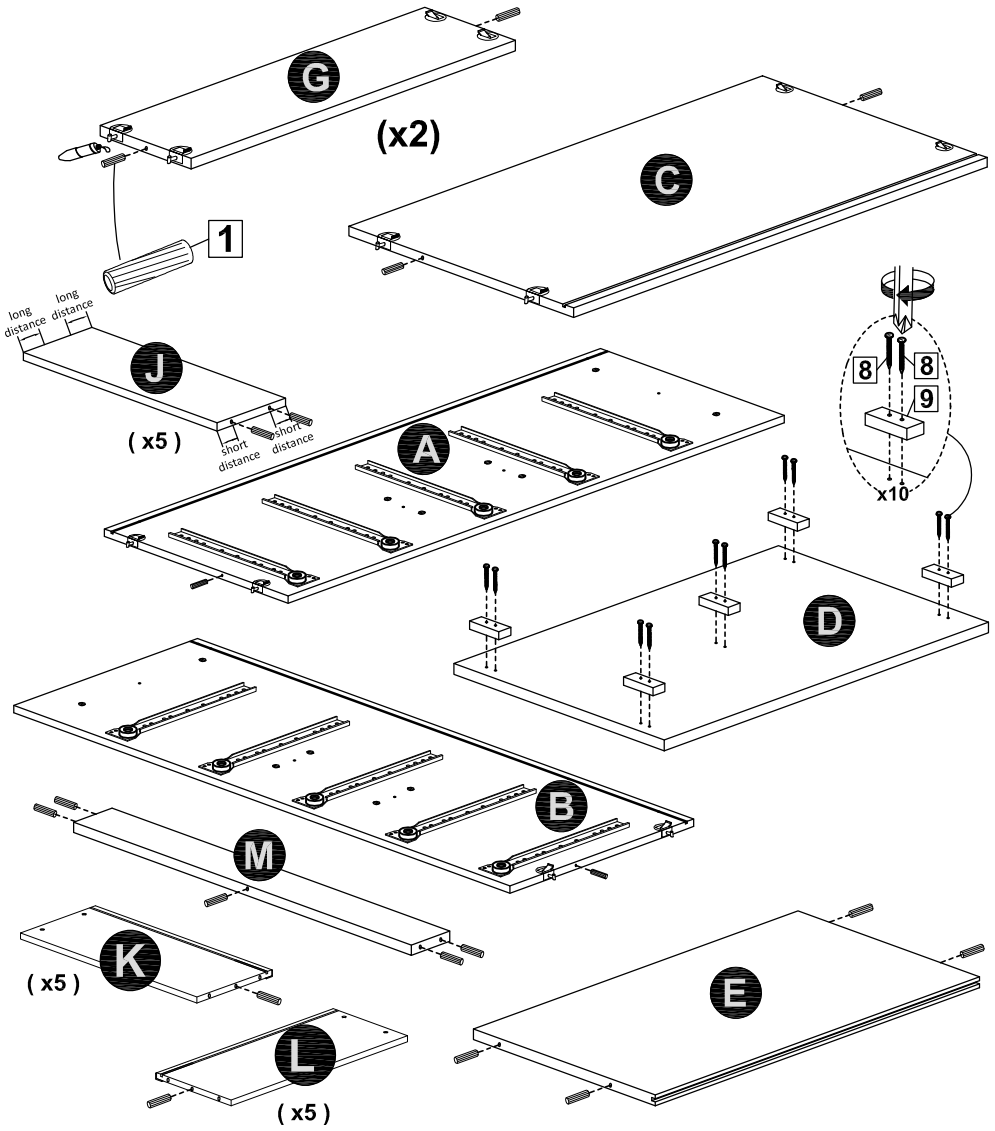

STEP 2

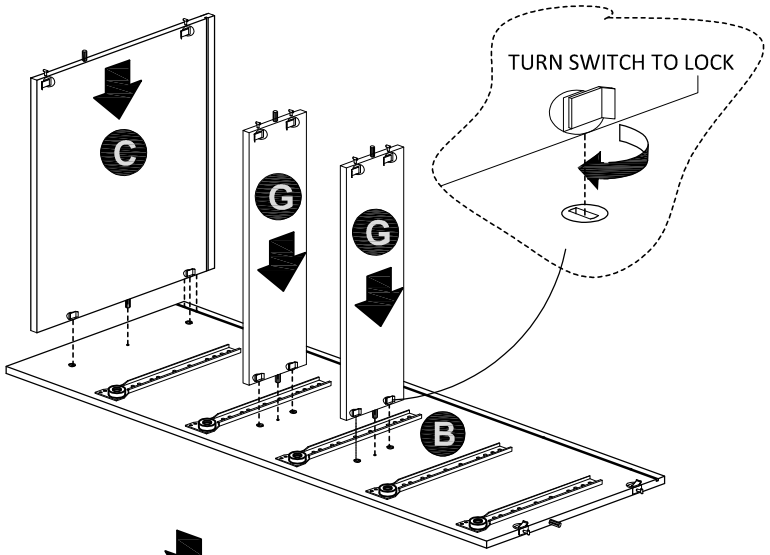

STEP 3

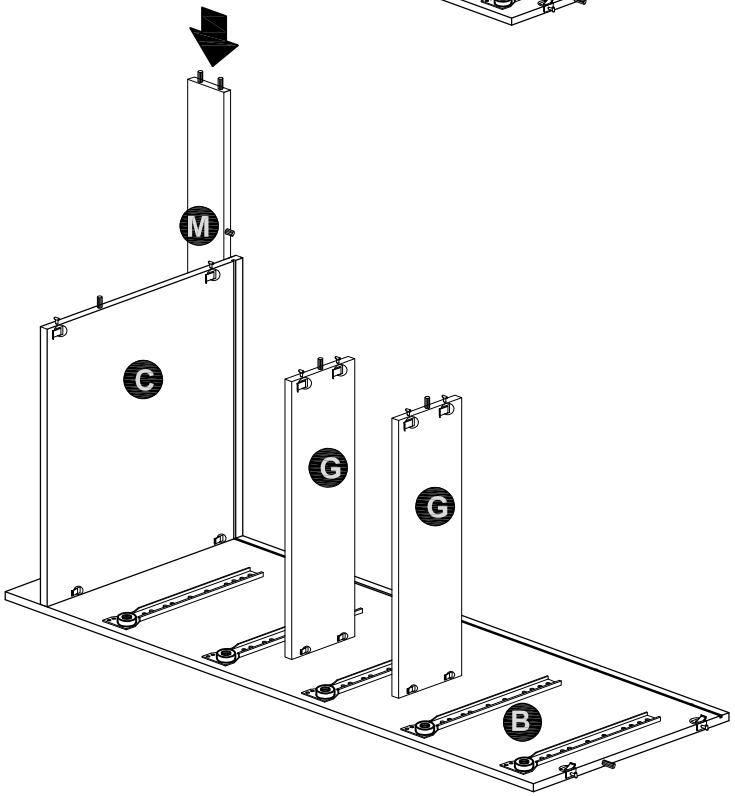

STEP 12

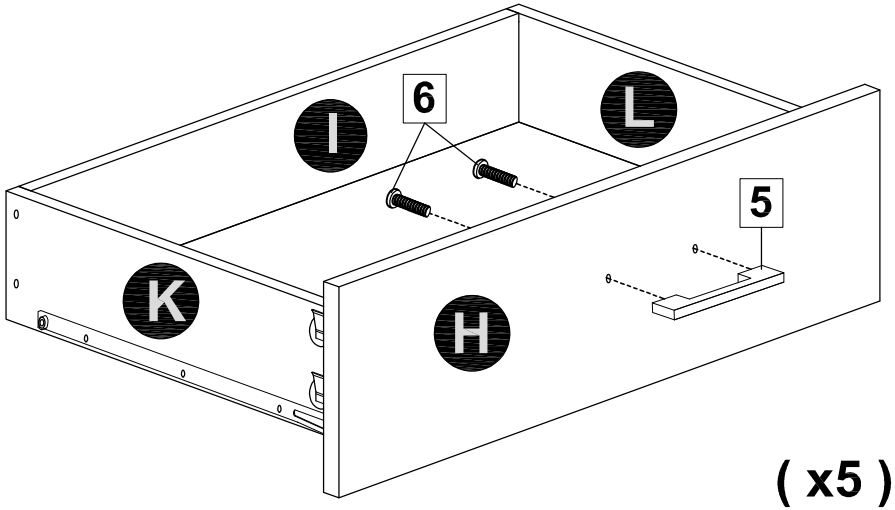

(x5)

STEP 13

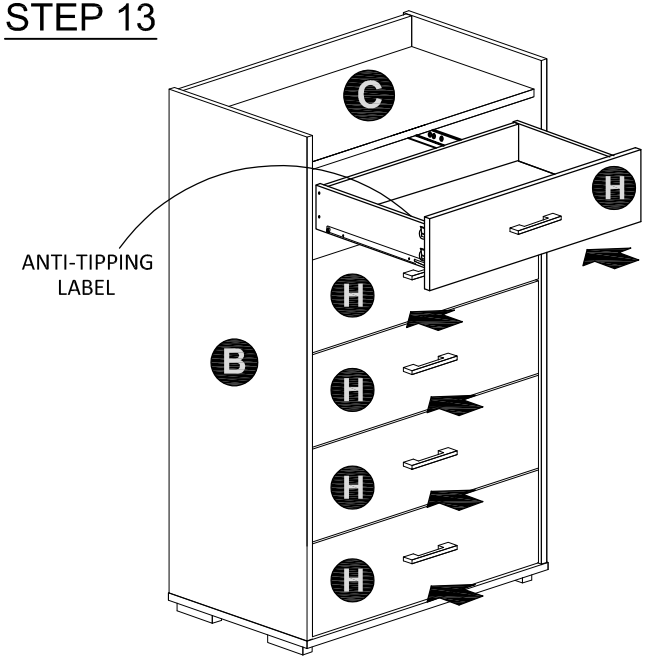

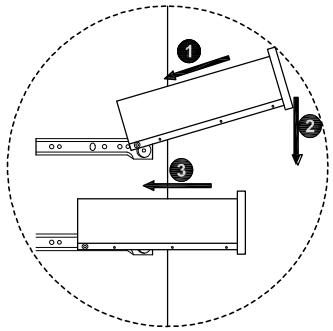

STEP 10

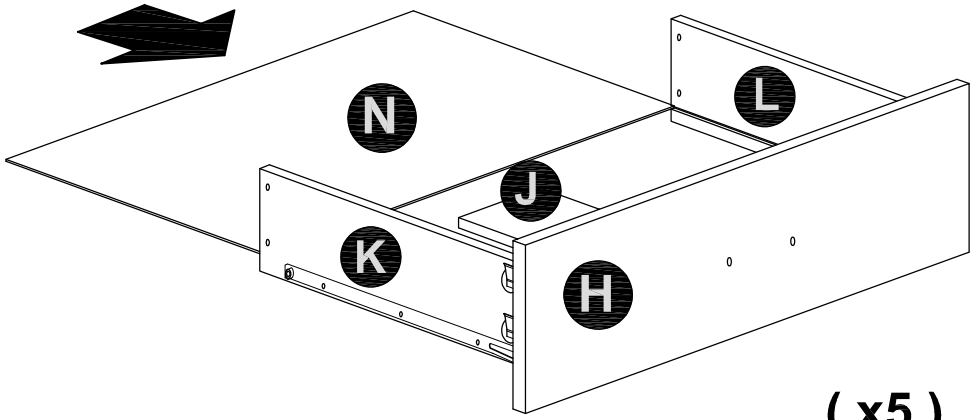

(x5)

STEP 11

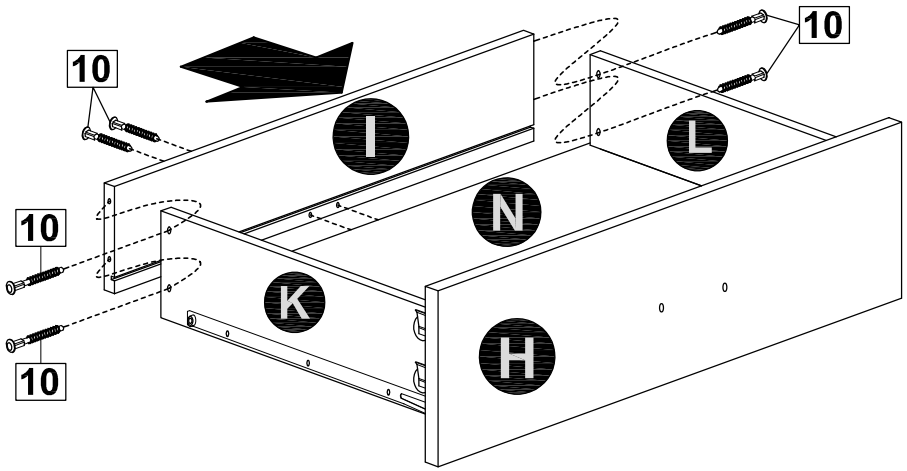

(x5)

STEP 4

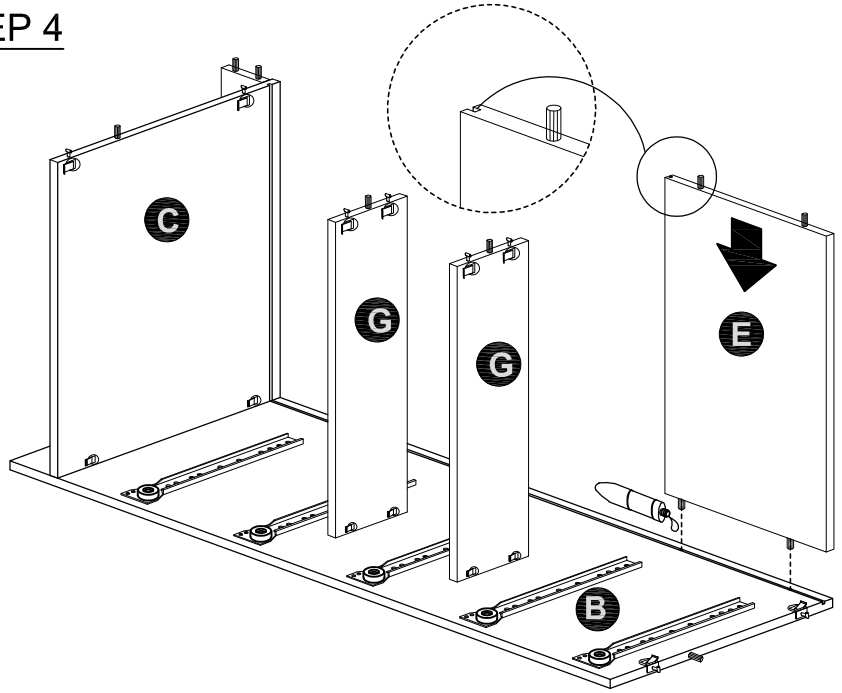

STEP 5

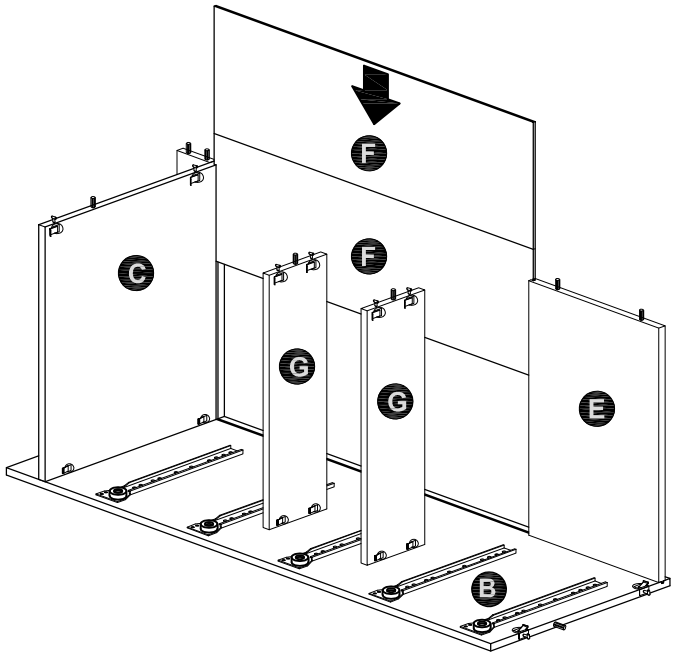

STEP 6

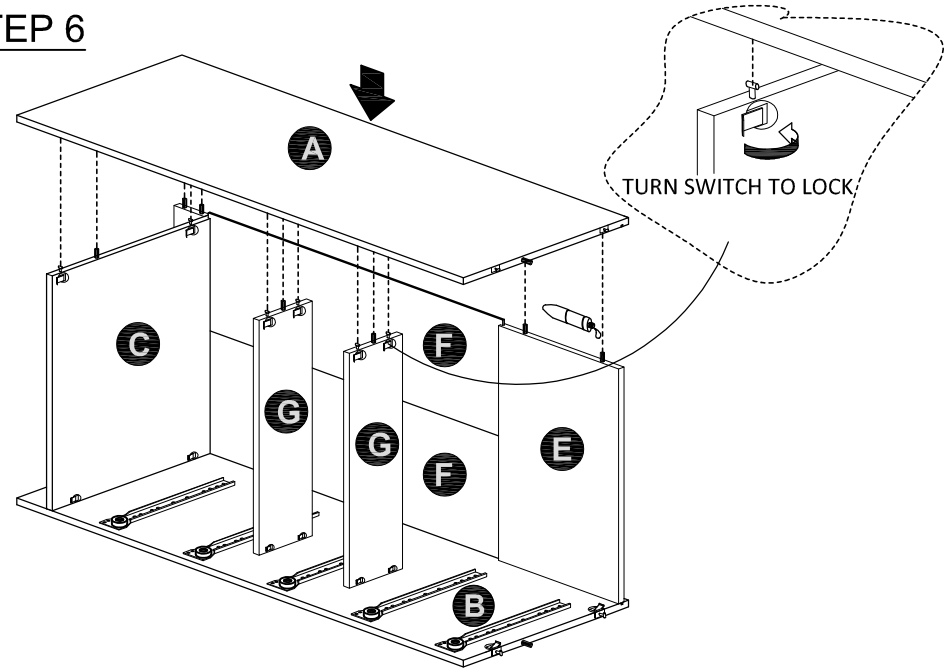

STEP 7

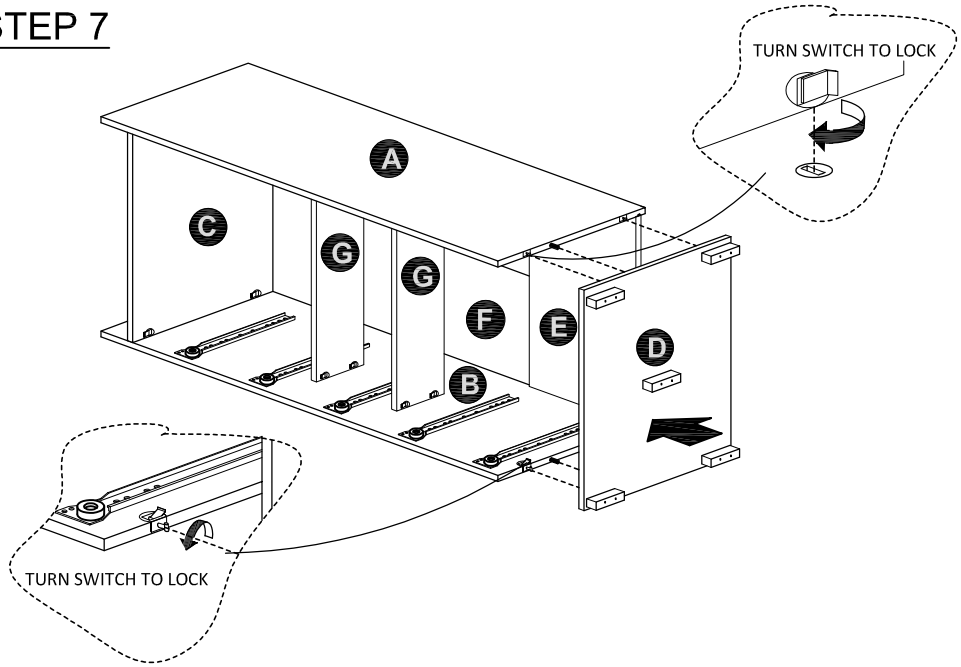

STEP 8

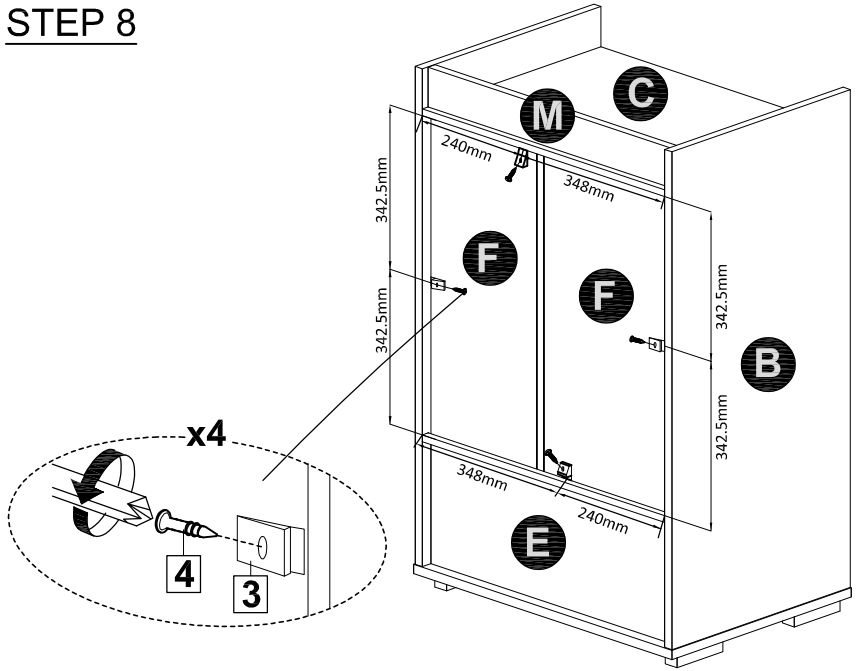

STEP 9

