ASSEMBLY INSTRUCTIONS

Furinno®
Fits Space. Fits Budget

www.furinno.com

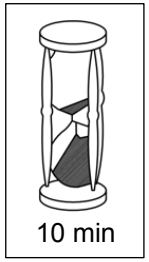
10 min

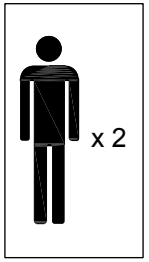
x 2


No Tools Required

USEFUL HINTS BEFORE YOU START:

1. Read each step carefully before starting.
2. It is important that each step is performed in correct order to avoid difficulties.
3. Identify, sort and count the parts before assembly.
4. Assemble the product on packaging cardboard to prevent scratch or damage.
5. Using uncompatible hardware might cause damage to the product.

IMPORTANT NOTES:

1. DO NOT FULLY-TIGHTEN the nut until all nuts are ready assembled.
2. DO NOT OVER-TIGHTEN the nut to avoid causing damages to the thread.
3. Keep all hardware parts out of reach of children.

NEED HELP? For replacement requests or product inquiries, please contact our Customer Service Team by emailing us at **support@furinno.com**. Thank you for selecting Furinno!

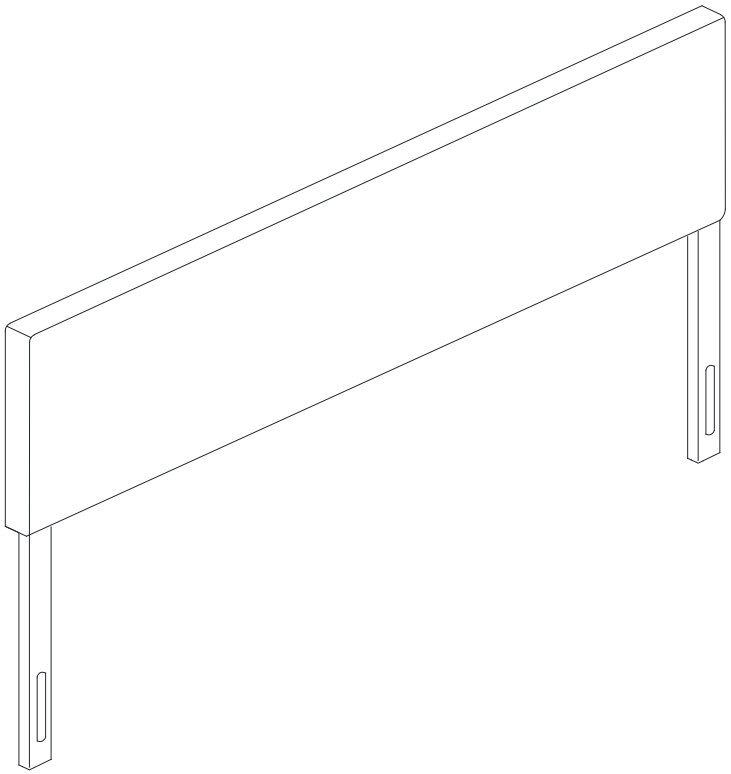

MODEL: FB17031K

FURINNO PLAIN HEADBOARD

ASSEMBLY INSTRUCTION

NO	PART LIST	QTY
1	HEADBOARD CUSHION	1PC
2	HEADBOARD LEG	2PCS
NO	**HARDWARE LIST**	**QTY**
A	JCBC SCREW M8 X 50	4PCS
B	SPRING WASHER	4PCS
C	FLAT WASHER SMALLER	4PCS
D	L - KEY M5 X 65mm	1PC

STEP 1

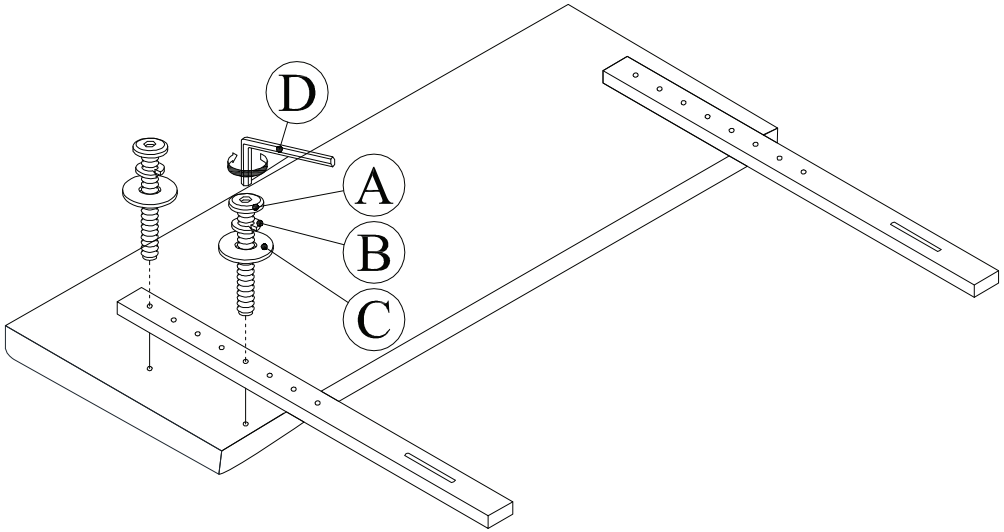

STEP 2

