Furinno®
Fits Space. Fits Budget

www.furinno.com


30 min


x 2

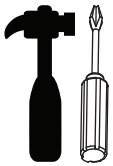
Tools Required

USEFUL HINTS BEFORE YOU START:

1. Read each step carefully before starting.
2. It is important that each step is performed in correct order to avoid difficulties.
3. Identify, sort and count the parts before assembly.
4. Assemble the product on packaging cardboard to prevent scratch or damage.
5. Using uncompatible hardware might cause damage to the product. DO NOT FULLY-TIGHTEN the nut until all nuts are ready assembled.

IMPORTANT NOTES:

* This unit has been designed to support maximum 500 lbs. Exceeding these load limits could cause sagging, instability, product collapse, and/or serious injury.
* Keep all hardware parts out of reach of children.

NEED HELP? For replacement requests or product inquiries, please contact our Customer Service Team by emailing us at **support@furinno.com**. Thank you for selecting Furinno!

ASSEMBLY INSTRUCTIONS

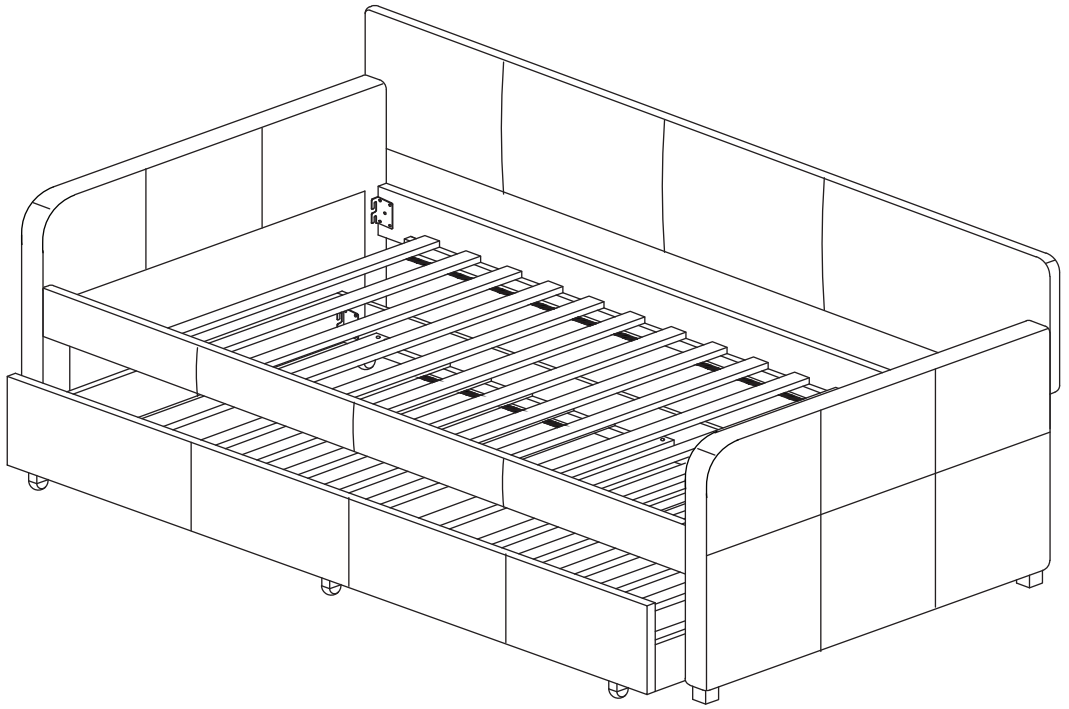

MODEL: FB18010D

FURINNO UPHOLSTERED DAYBED

ASSEMBLY INSTRUCTION

NO	PART LIST	QTY
1	BACK REST	1PC
2	LEFT ARM	1PC
3	RIGHT ARM	1PC
4	FRONT SIDE RAIL	1PC
5	BACK SIDE RAIL	1PC
6	LEGS	4PCS
7	DAYBED SLAT	2 SET
8	TRUNDLE FRONT RAIL	1PC
9	TRUNDLE BACK RAIL	1PC
10	TRUNDLE SIDE RAIL	2PCS
11	SLATS	3PCS
12	TRUNDLE SLAT	2 SET
13	CASTOR	6PCS

NO	HARDWARE LIST	QTY
A	JCBB SCREW M8 X 20	16PCS
B	JCBC SCREW M6 X 35	4PCS
C	JCBC SCREW M6 X 50	16PCS
D	SPRING WASHER	16PCS
E	FLAT WASHER (BIG)	4PCS
F	FLAT WASHER (SMALL)	12PCS
G	SCREW M4 X 32	16PCS
H	SCREW M4 X 16	24PCS
I	L - KEY M4 X 65	1PC
J	L - KEY M5 X 65	1PC

STEP 1

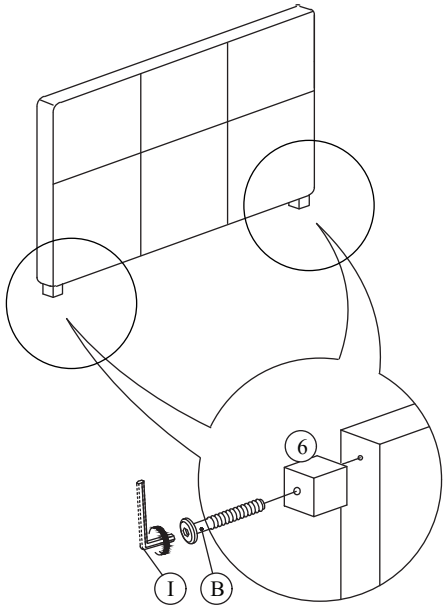

STEP 2

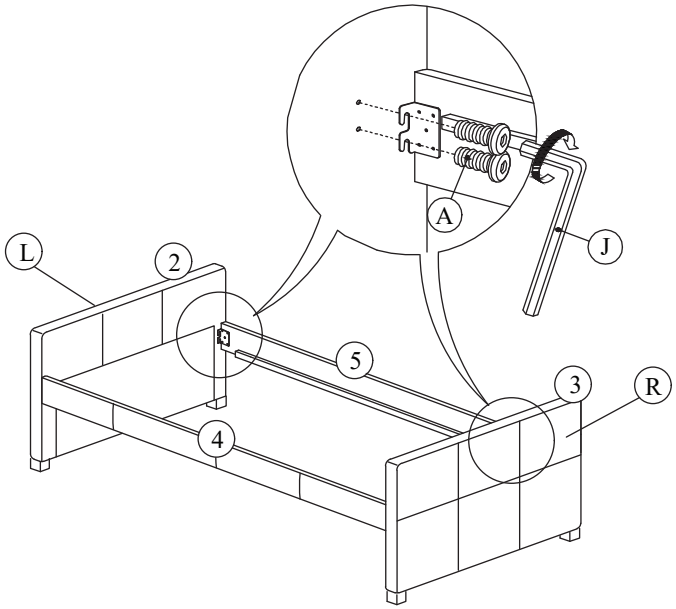

STEP 3

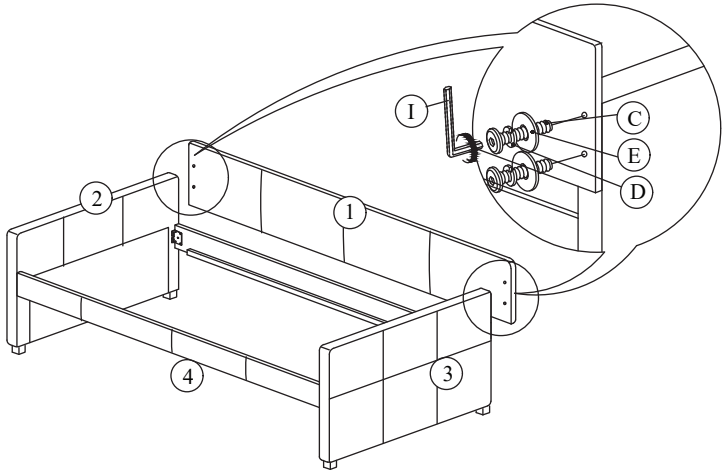

STEP 4

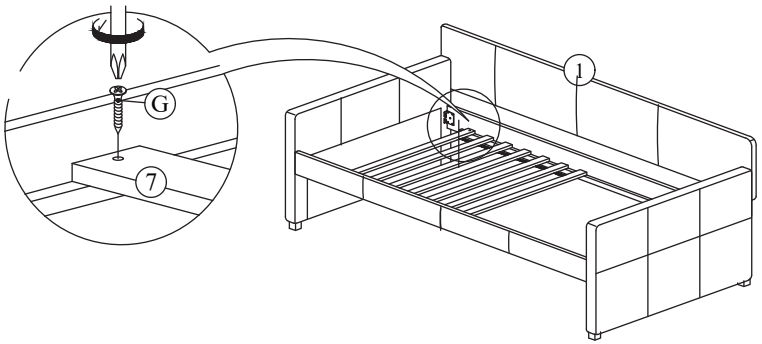

ASSEMBLY INSTRUCTION

STEP 5

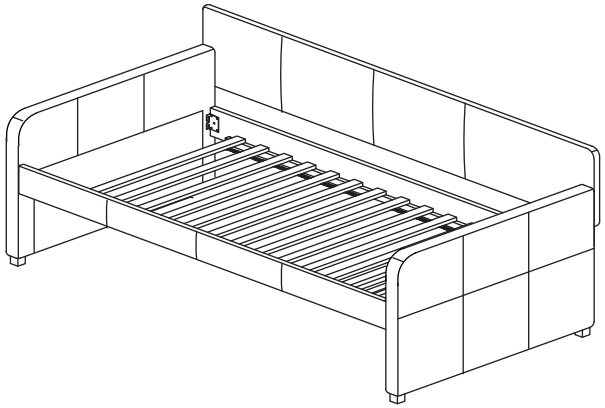

STEP 6

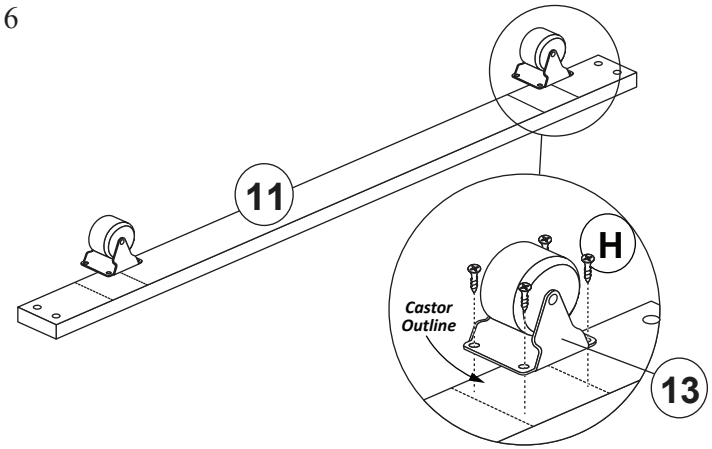

STEP 7

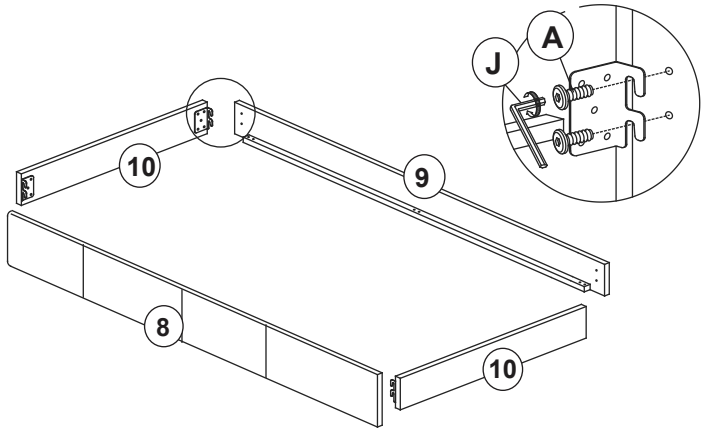

STEP 8

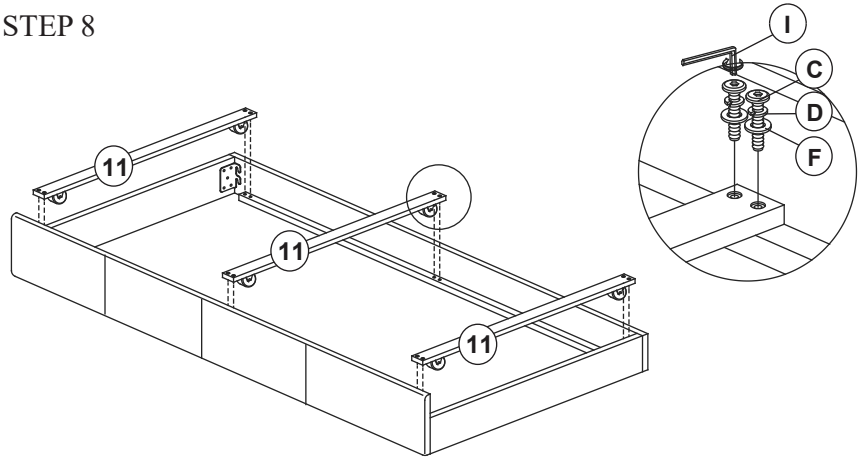

STEP 9

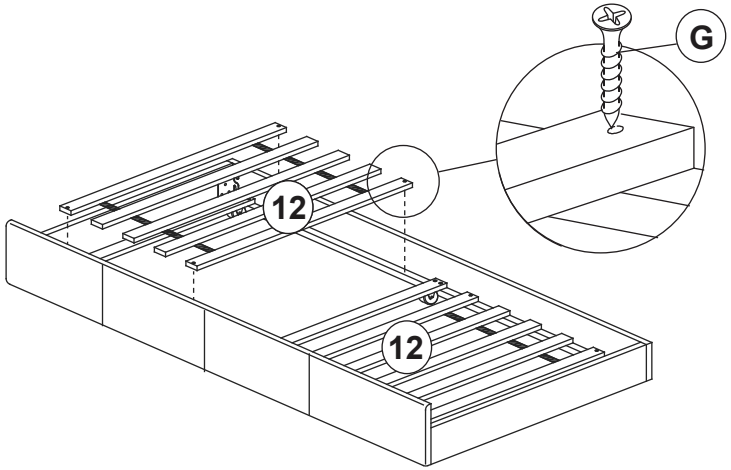

STEP 10

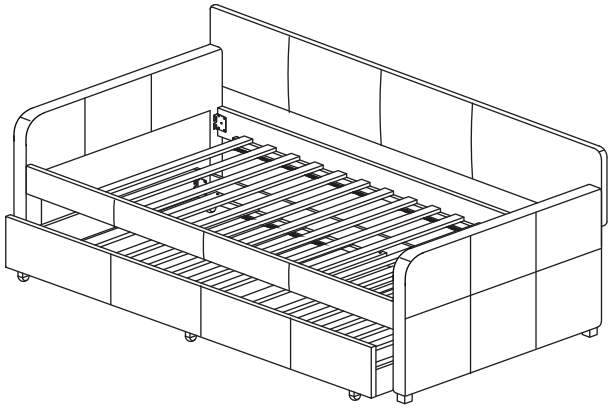

ASSEMBLY
COMPLETED