Furinno®
Fits Space. Fits Budget

www.furinno.com


30 min


x 2


Tool Required

USEFUL HINTS BEFORE YOU START:

1. Read each step carefully before starting.
2. It is important that each step is performed in correct order to avoid difficulties.
3. Identify, sort and count the parts before assembly.
4. Assemble the product on packaging cardboard to prevent scratch or damage.
5. Using uncompatible hardware might cause damage to the product. DO NOT FULLY-TIGHTEN the nut until all nuts are ready assembled.

IMPORTANT NOTES:

* This unit has been designed to support maximum loads:

  TWIN & TWIN XL: 200 lbs, FULL: 400 lbs,
  QUEEN: 500 lbs, KING & CAL.KING: 600 lbs

  Exceeding these load limits could cause sagging, instability, product collapse, and/or serious injury.
* Keep all hardware parts out of reach of children.

NEED HELP? For replacement requests or product inquiries, please contact our Customer Service Team by emailing us at **support@furinno.com**. Thank you for selecting Furinno!

ASSEMBLY INSTRUCTIONS

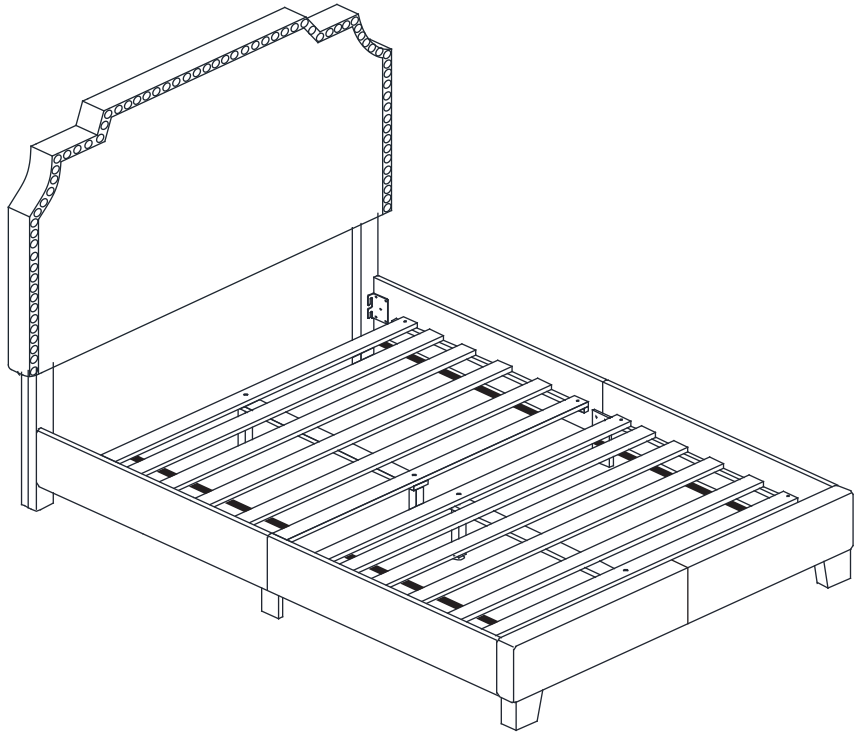

MODEL: FB18014Q

FURINNO NAILHEAD TRIM BED FRAME

ASSEMBLY INSTRUCTION

NO	PART LIST	QTY
1	HEADBOARD CUSHION	1PC
2	LEFT HEADBOARD LEG (WITH "L" LABEL)	1PC
3	RIGHT HEADBOARD LEG (WITH "R" LABEL)	1PC
4	FOOTBOARD CUSHION	1PC
5	FOOTBOARD LEGS	2PCS
6	SIDE RAIL (A)	2PCS
7	SIDE RAIL (B)	2PCS
8	SIDE RAIL SUPPORT LEG	2PCS
9	ROLL SLAT	2SET
10	CENTER SUPPORT RAILS	2PCS
11	SUPPORT LEGS WITH ADJUSTABLE FEET	4PCS

NO	HARDWARE LIST	QTY
A	JCBB SCREW M8 X 20	8PCS
B	JCBC SCREW M6 X 25	8PCS
C	JCBC SCREW M6 X 35	6PCS
D	JCBC SCREW M6 X 50	4PCS
E	JCBC SCREW M6 X 70	2PCS
F	WOOD DOWEL	2PCS
G	SPRING WASHER	14PCS
H	FLAT WASHER SMALLER	14PCS
I	SCREW M4 X 32mm	8 PCS
J	L - KEY M5 X 65mm	1PC
K	L - KEY M4 X 100mm	1PC

NOTE:

Some parts packed inside the zippered compartment at the back of the headboard.

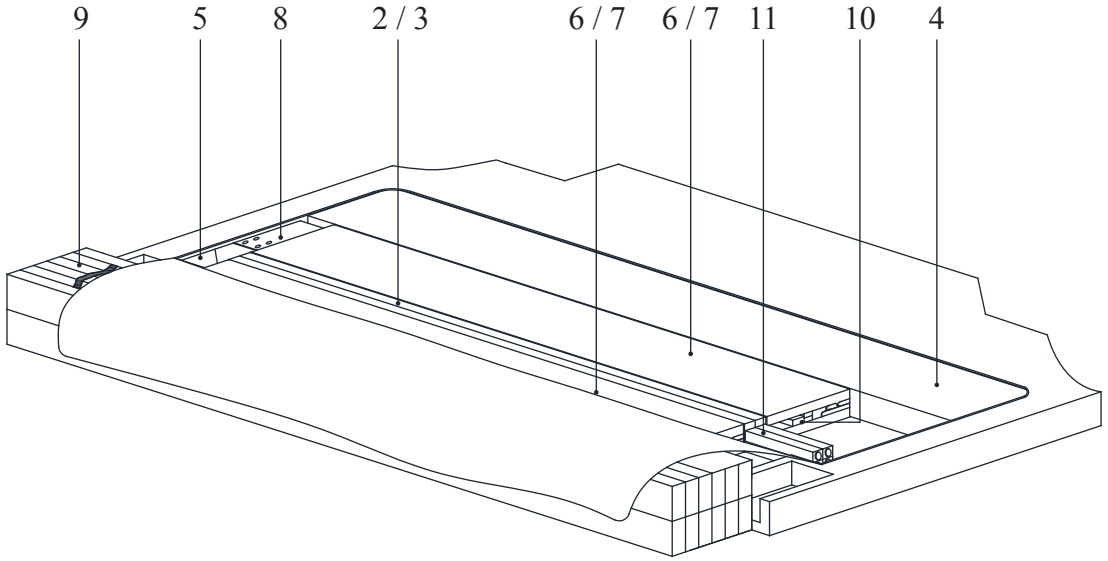

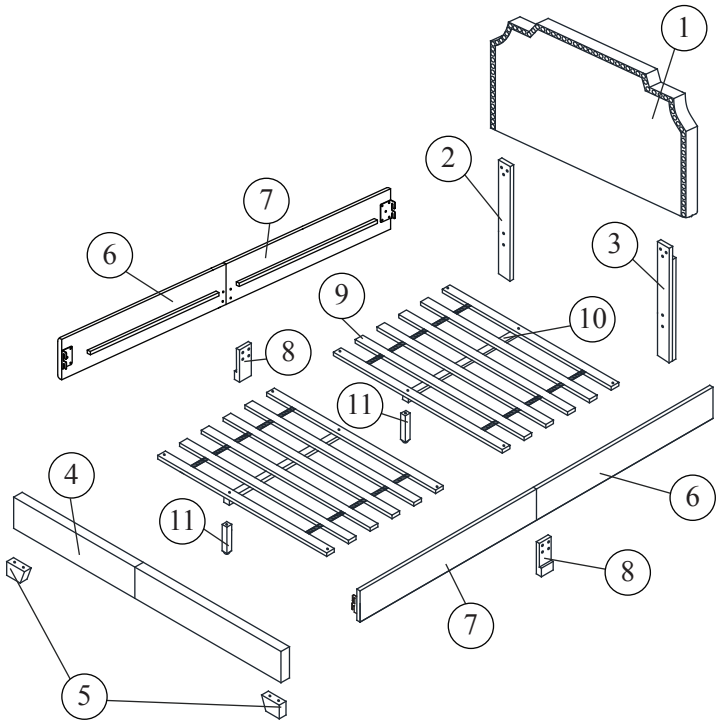

ASSEMBLY INSTRUCTION

STEP 1

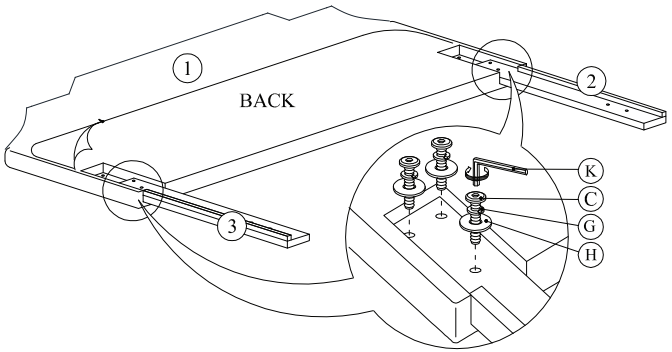

STEP 2

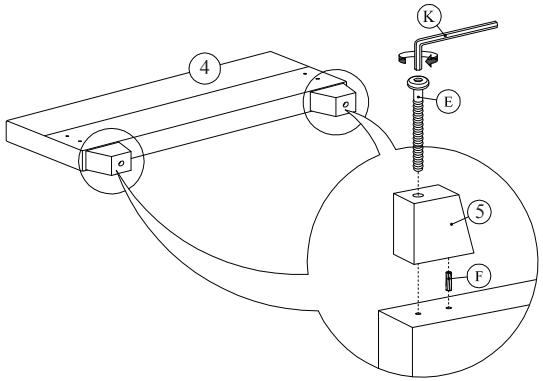

STEP 3

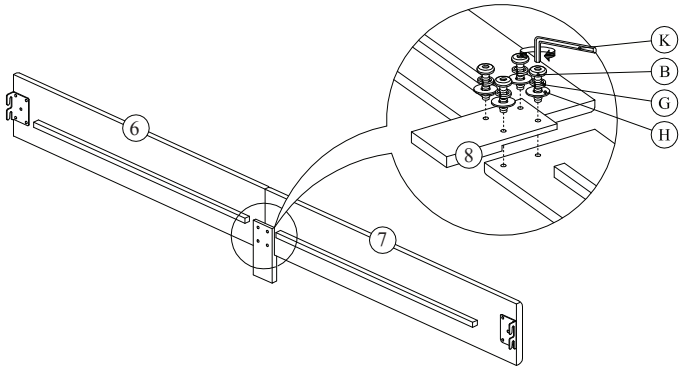

STEP 4

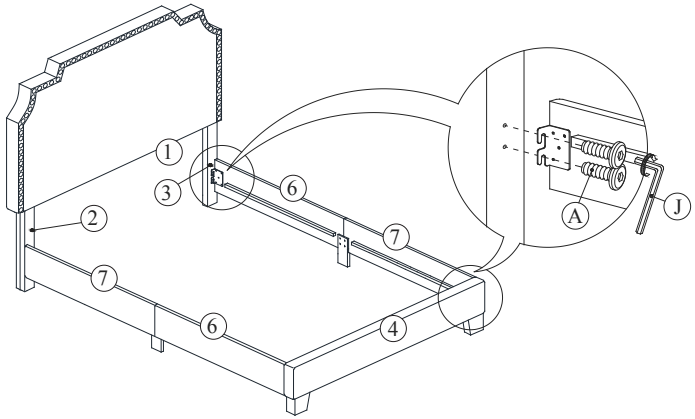

STEP 5

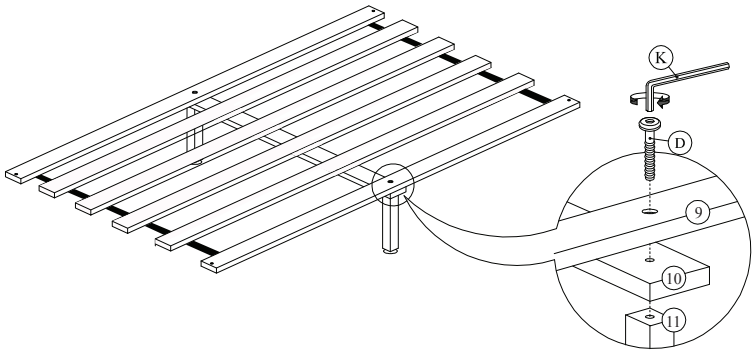

STEP 6

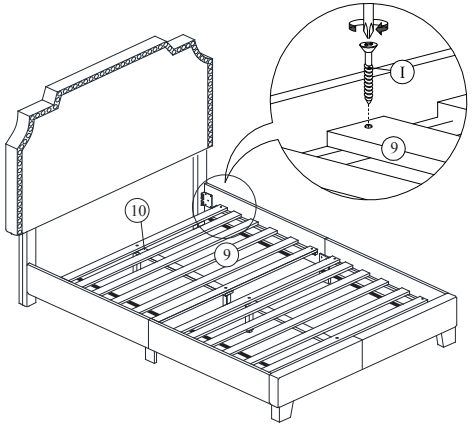

ASSEMBLY
COMPLETED