Furinno®
Fits Space. Fits Budget

www.furinno.com

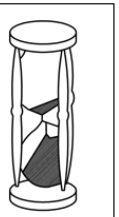
10 min


x 1

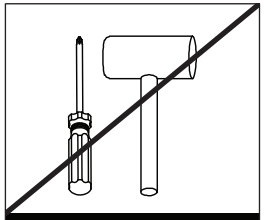
No Tools Required

USEFUL HINTS BEFORE YOU START:

1. Read each step carefully before starting.
2. It is important that each step is performed in correct order to avoid difficulties.
3. Identify, sort and count the parts before assembly.
4. Assemble the product on packaging cardboard to prevent scratch or damage.
5. Using uncompatible hardware might cause damage to the product. DO NOT FULLY-TIGHTEN the nut until all nuts are ready assembled.

IMPORTANT NOTES:

* This unit has been designed to support maximum loads:

200 lbs

Exceeding these load limits could cause sagging, instability, product collapse, and/or serious injury.

* Keep all hardware parts out of reach of children.

NEED HELP? For replacement requests or product inquiries, please contact our Customer Service Team by emailing us at **support@furinno.com**. Thank you for selecting Furinno!

ASSEMBLY INSTRUCTIONS

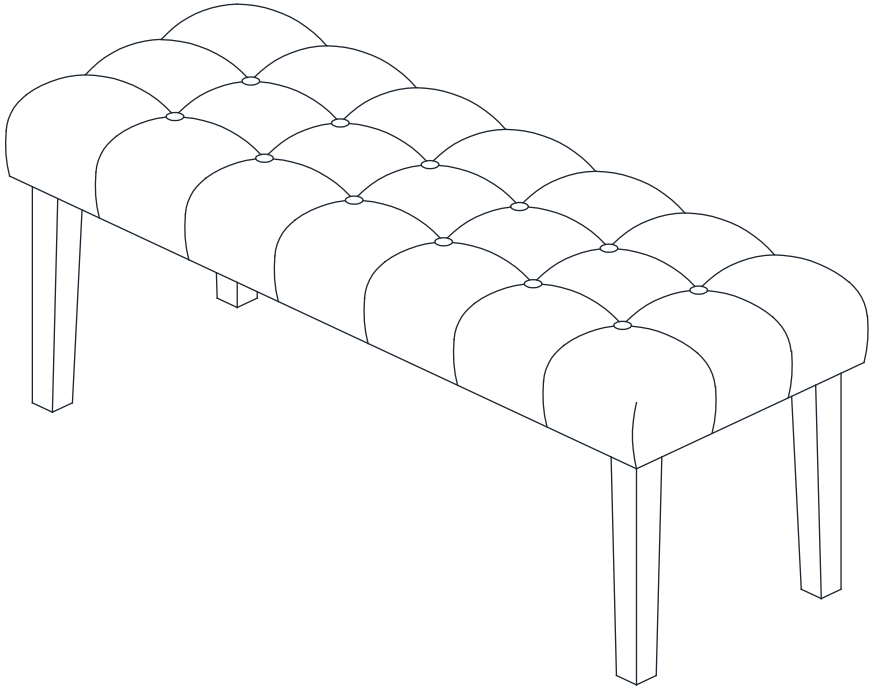

MODEL: FB19111

BENCH

ASSEMBLY INSTRUCTION

NO	PART LIST	QTY
1	 CUSHION SEAT	1PC
2	 LEG	4PCS
NO	**HARDWARE LIST**	**QTY**
A	 JCBC SCREW M6 x 60mm	8PCS
B	 SPRING WASHER	8PCS
C	 FLAT WASHER	8PCS
D	 L-KEY M4 x 65mm	1PC

NOTE:
Some parts packed under the seat.

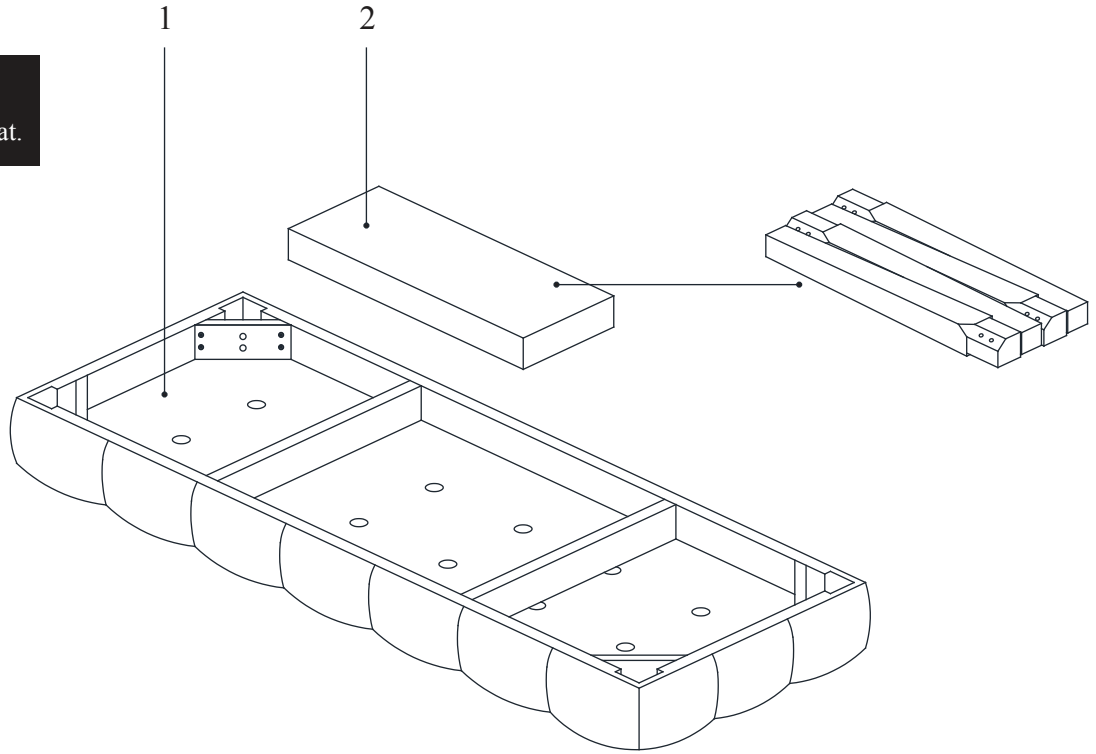

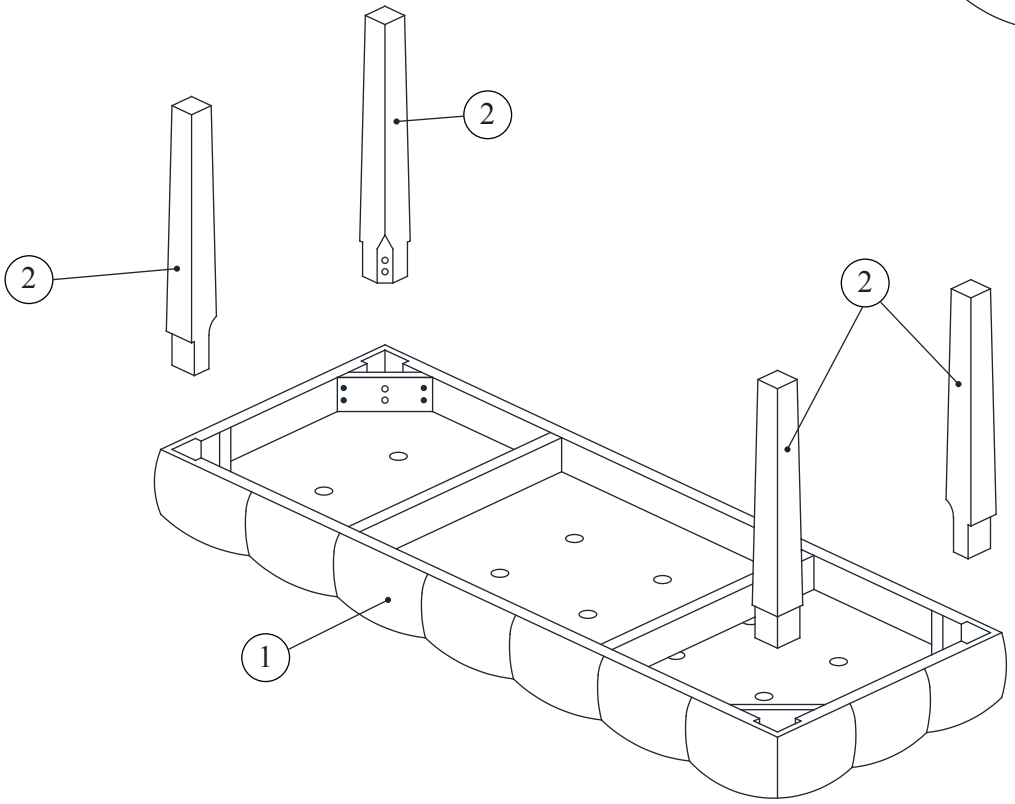

ASSEMBLY INSTRUCTION

STEP 1

Open the cover to get Legs (2).

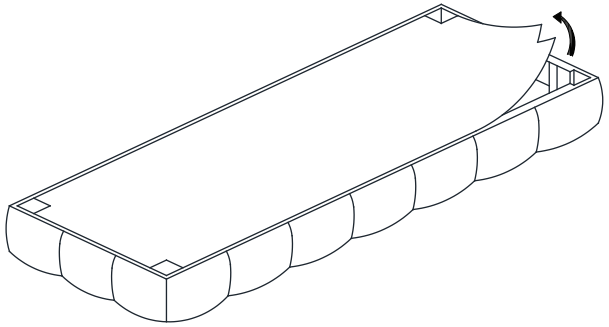

STEP 2

Assemble all Legs (2) as shown:

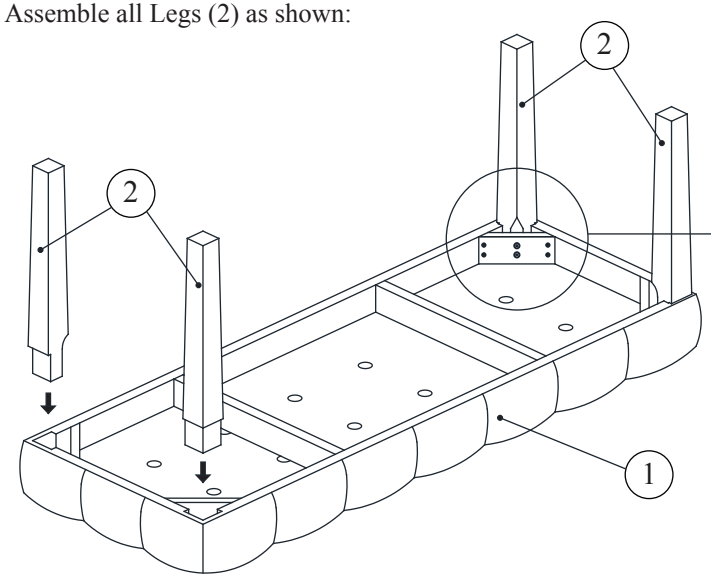

Note: Repeat step for the second hole.

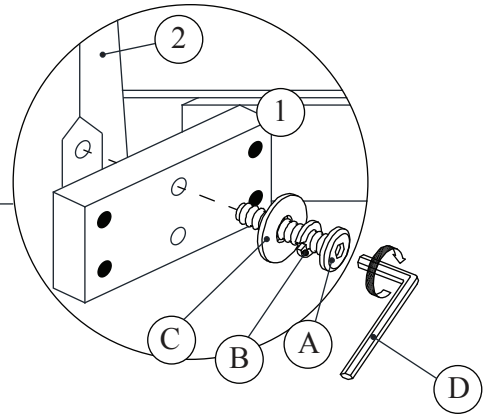

STEP 3

Cover the back with the black cover.

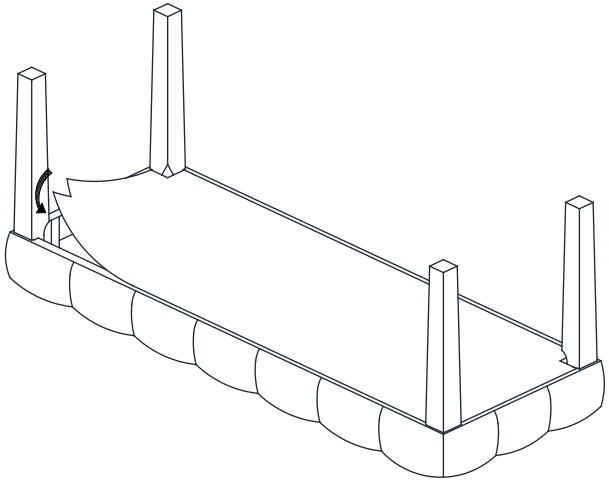

STEP 4

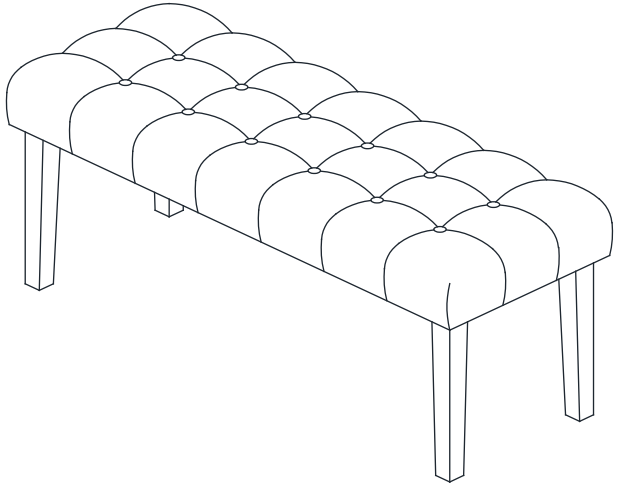

ASSEMBLY
COMPLETED