Furinno®
Fits Space. Fits Budget

www.furinno.com

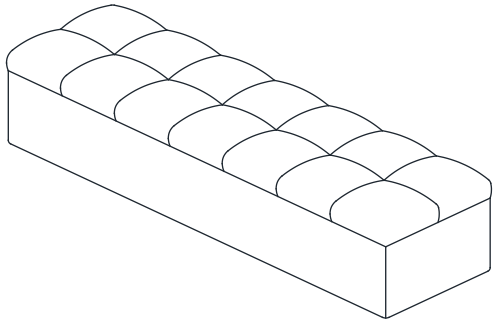

IMPORTANT NOTES:

* This unit has been designed to support maximum loads:

250 lbs

Exceeding these load limits could cause sagging, instability, product collapse, and/or serious injury.

* Keep all hardware parts out of reach of children.
* Keep lid closed and secured when not in use.

NEED HELP? For replacement requests or product inquiries, please contact our Customer Service Team by emailing us at **support@furinno.com**. Thank you for selecting Furinno!

MODEL: FB19112

STORAGE BENCH

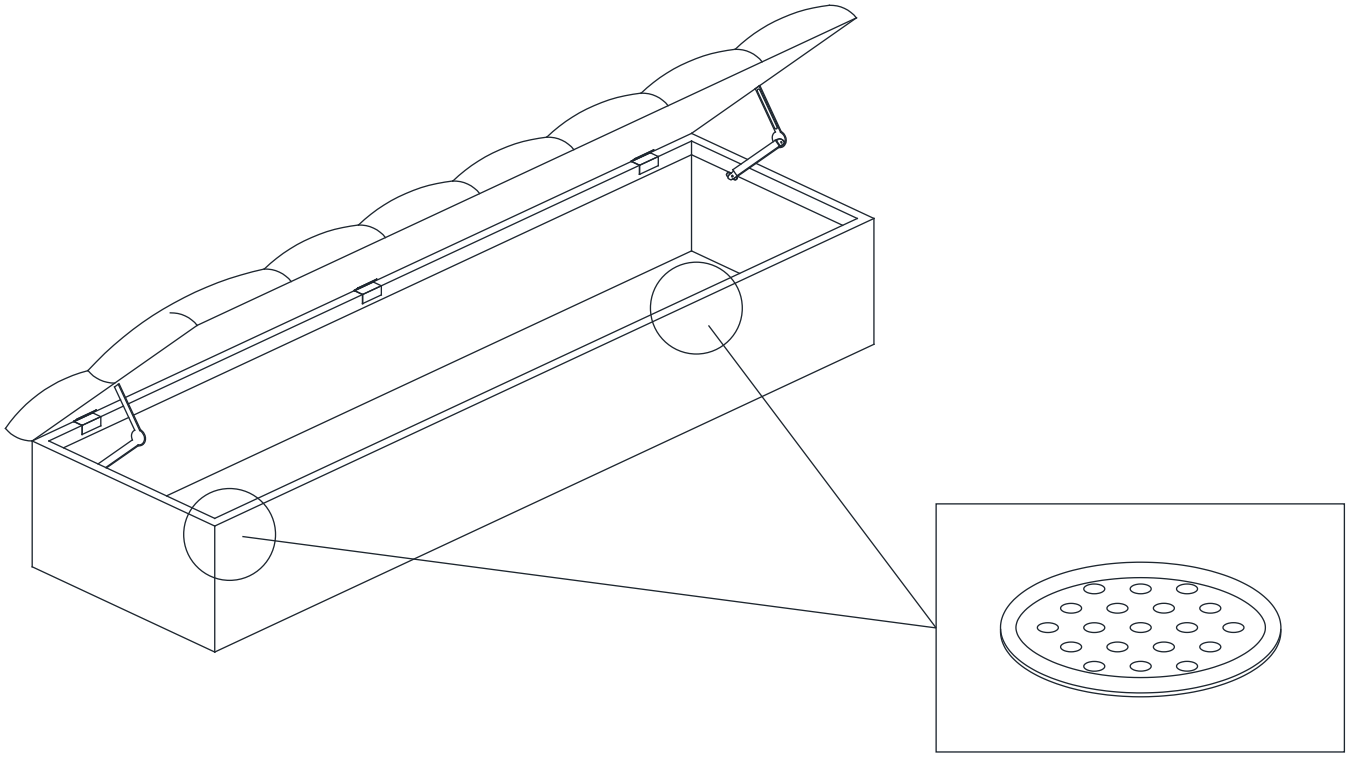

Vented holes at the bottom of storage compartment allow for air flow and breathability.