ASSEMBLY INSTRUCTIONS

Furinno®
Fits Space. Fits Budget

www.furinno.com

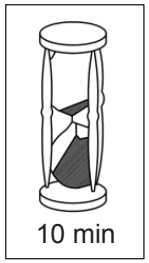

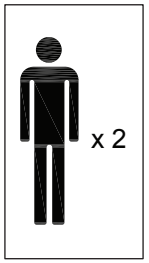

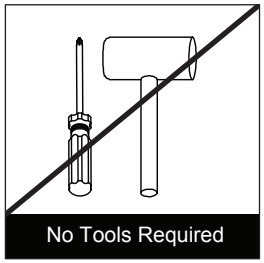

USEFUL HINTS BEFORE YOU START:

1. Read each step carefully before starting.
2. It is important that each step is performed in correct order to avoid difficulties.
3. Identify, sort and count the parts before assembly.
4. Assemble the product on packaging cardboard to prevent scratch or damage.
5. Using uncompatible hardware might cause damage to the product. DO NOT FULLY-TIGHTEN the nut until all nuts are ready assembled.

IMPORTANT NOTES:

* This unit has been designed to support maximum loads:

250 lbs

Exceeding these load limits could cause sagging, instability, product collapse, and/or serious injury.

* Keep all hardware parts out of reach of children.
* Keep lid closed and secured when not in use.

NEED HELP? For replacement requests or product inquiries, please contact our Customer Service Team by emailing us at **support@furinno.com**. Thank you for selecting Furinno!

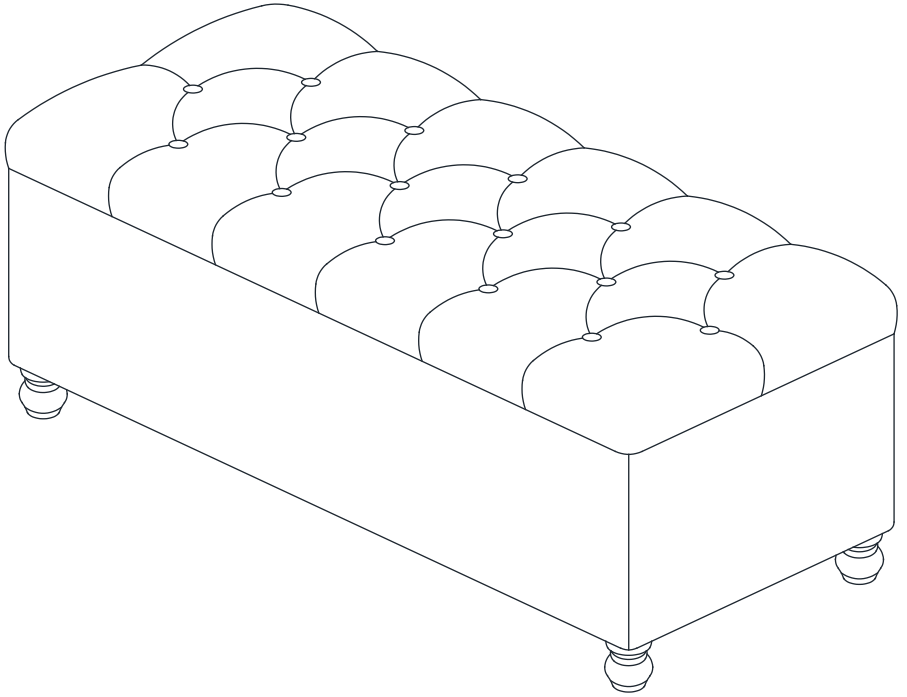

MODEL: FB19113

STORAGE BENCH

ASSEMBLY INSTRUCTION

NO	PART LIST	QTY
1	 STORAGE BENCH	1PC
2	 LEG	4PCS

NOTE:
Some parts packed inside the bench.

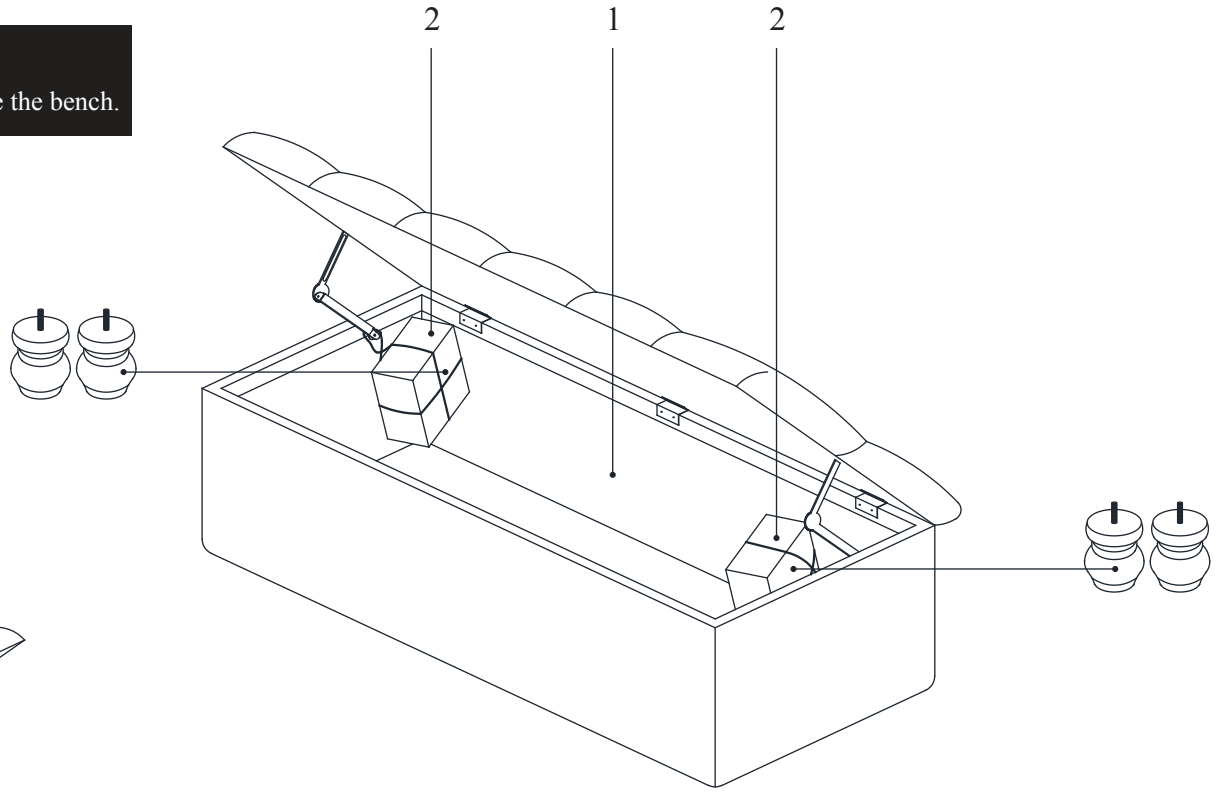

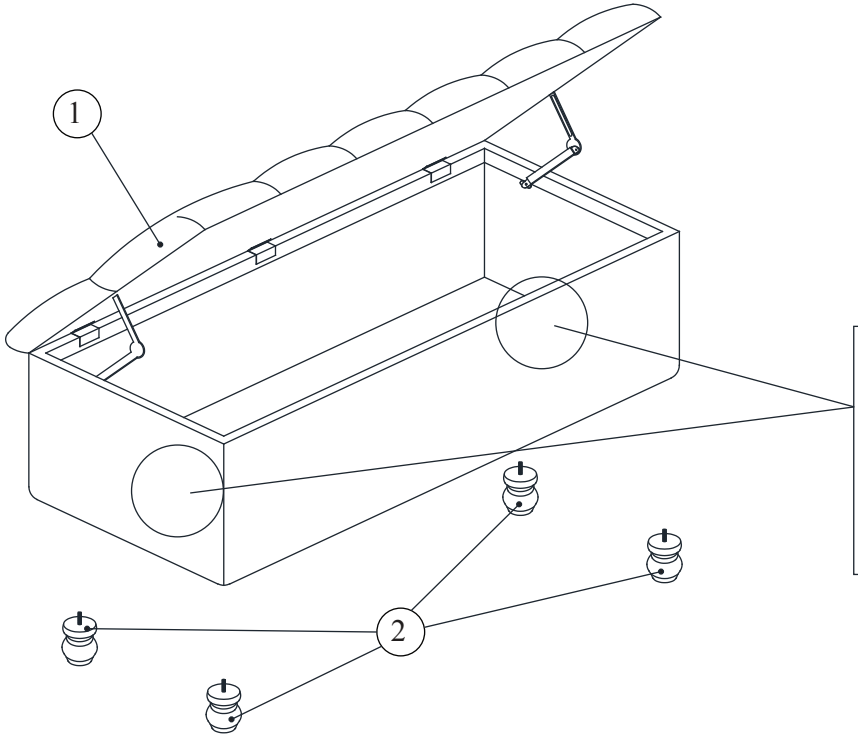

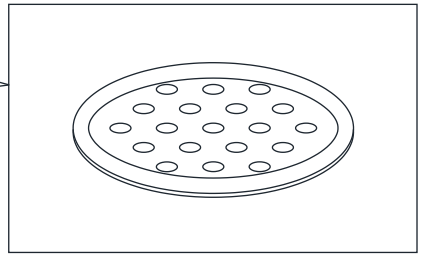

Vented holes at the bottom of storage compartment allow for air flow and breathability.

ASSEMBLY INSTRUCTION

STEP 1

Assemble all Legs (2) as shown:

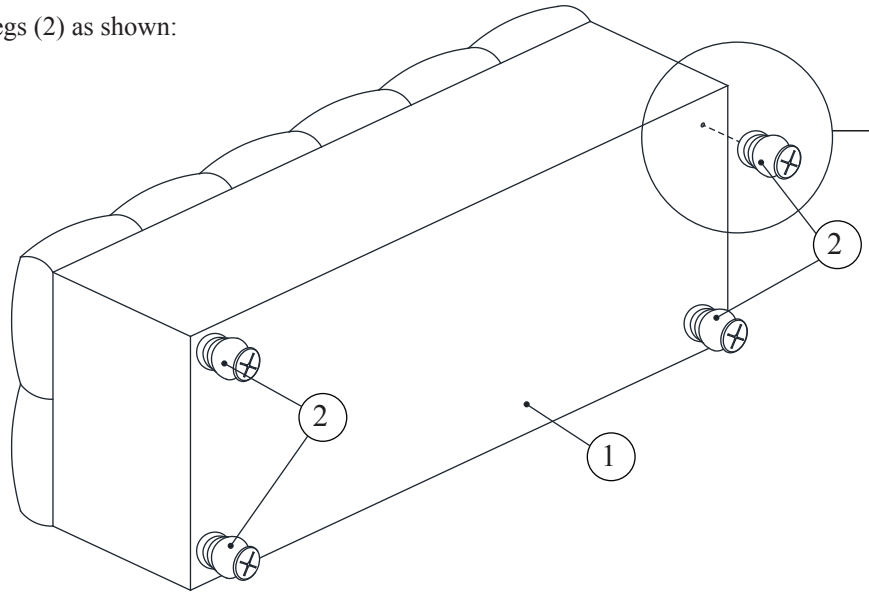

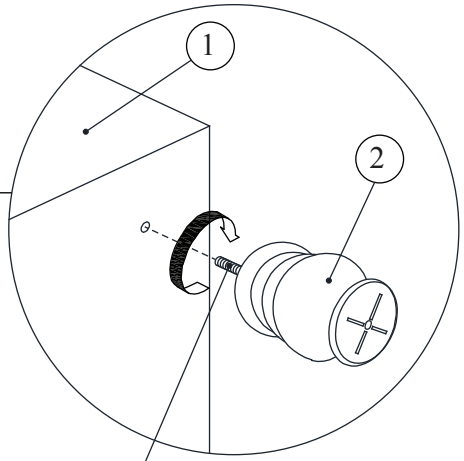

Note: Please remove plastic cap on the screw before screw in the leg.

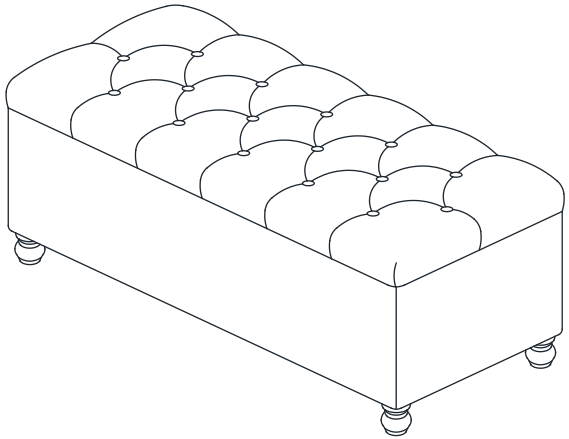

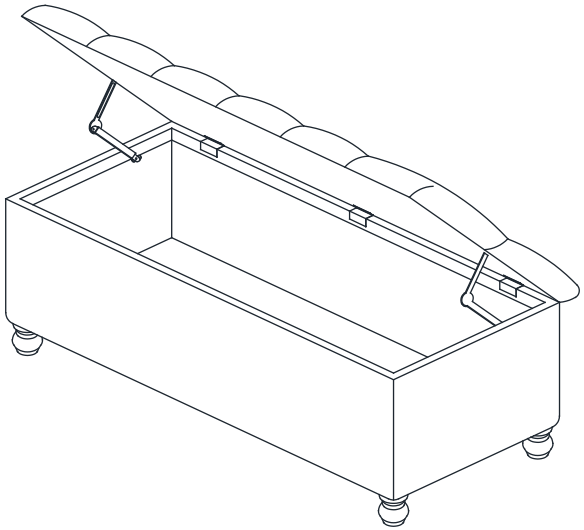

ASSEMBLY COMPLETED