Furinno®
Fits Space. Fits Budget

**www.furinno.com**


30 min


x 2


Tool Required

**USEFUL HINTS BEFORE YOU START:**

1. Read each step carefully before starting.
2. It is important that each step is performed in correct order to avoid difficulties.
3. Identify, sort and count the parts before assembly.
4. Assemble the product on packaging cardboard to prevent scratch or damage.
5. Using uncompatible hardware might cause damage to the product. DO NOT FULLY-TIGHTEN the nut until all nuts are ready assembled.

**IMPORTANT NOTES:**

* This unit has been designed to support maximum loads:
  **TWIN & TWIN XL: 200 lbs, FULL: 400 lbs,**
  **QUEEN: 500 lbs, KING & CAL.KING: 600 lbs**
  Exceeding these load limits could cause sagging, instability, product collapse, and/or serious injury.
* Keep all hardware parts out of reach of children.

**NEED HELP?** For replacement requests or product inquiries, please contact our Customer Service Team by emailing us at **support@furinno.com**. Thank you for selecting Furinno!

# ASSEMBLY INSTRUCTIONS

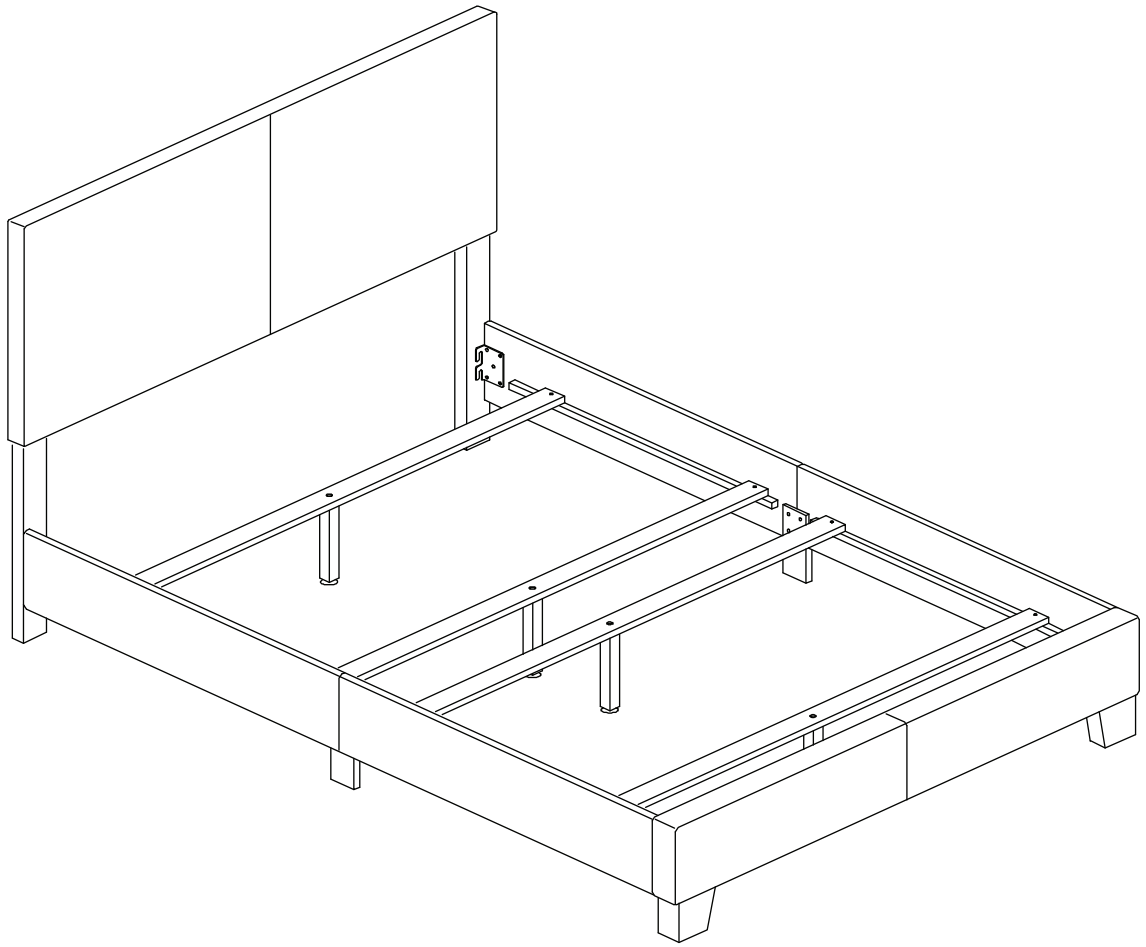

# MODEL: FB19821Q

FURINNO BED FRAME

# ASSEMBLY INSTRUCTION

| NO | PART LIST | QTY |
|---|---|---|
| 1 | HEADBOARD CUSHION | 1PC |
| 2 | LEFT HEADBOARD LEG (WITH "L" LABEL) | 1PC |
| 3 | RIGHT HEADBOARD LEG (WITH "R" LABEL) | 1PC |
| 4 | FOOTBOARD CUSHION | 1PC |
| 5 | FOOTBOARD LEGS | 2PCS |
| 6 | SIDE RAIL (A) | 2PCS |
| 7 | SIDE RAIL (B) | 2PCS |
| 8 | SIDE RAIL SUPPORT LEG | 2PCS |
| 9 | SLAT | 4PCS |
| 10 | SUPPORT LEGS with adjustable feet | 4PCS |

| NO | HARDWARE LIST | QTY |
|---|---|---|
| A | JCBB SCREW M8 X 20 | 8PCS |
| B | JCBC SCREW M6 X 25 | 8PCS |
| C | JCBC SCREW M6 X 35 | 10PCS |
| D | JCBC SCREW M6 X 70 | 2PCS |
| E | WOOD DOWEL | 2PCS |
| F | SPRING WASHER | 14PCS |
| G | FLAT WASHER | 14PCS |
| H | SCREW M4 X 32mm | 8PCS |
| I | L - KEY M5 X 65mm | 1PC |
| J | L - KEY M4 X 100mm | 1PC |

**NOTE:**
Some parts packed inside the zippered compartment at the back of the headboard.

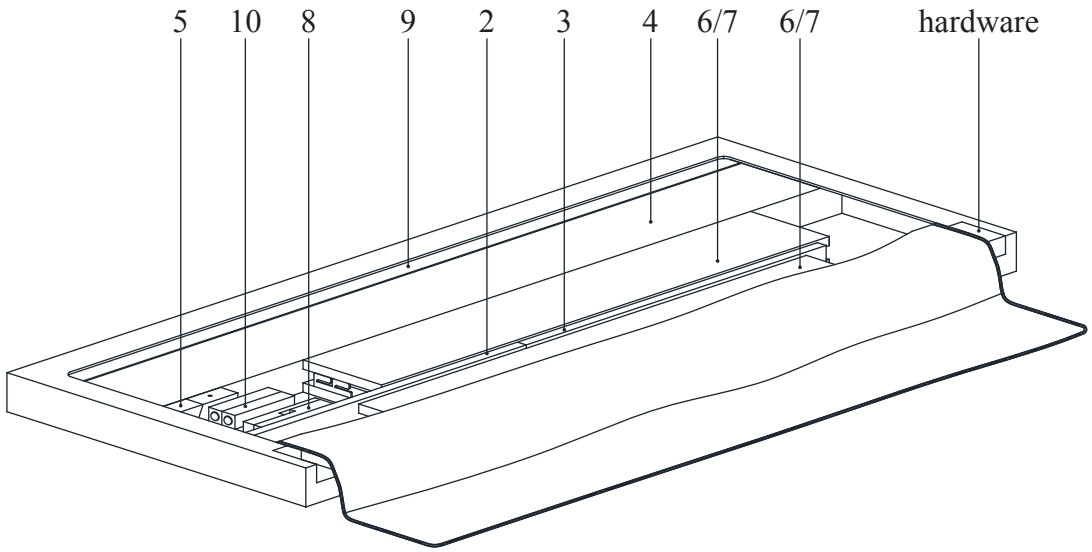


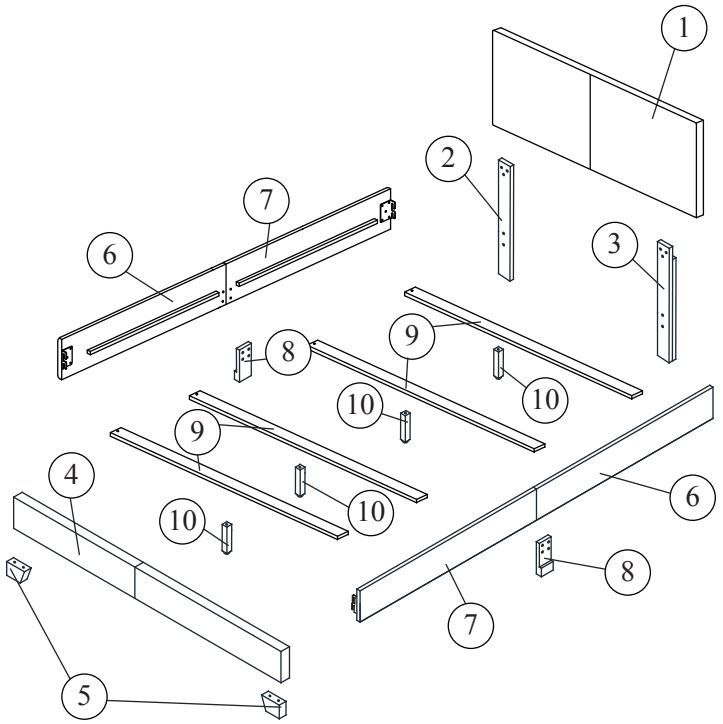

# ASSEMBLY INSTRUCTION

STEP 1

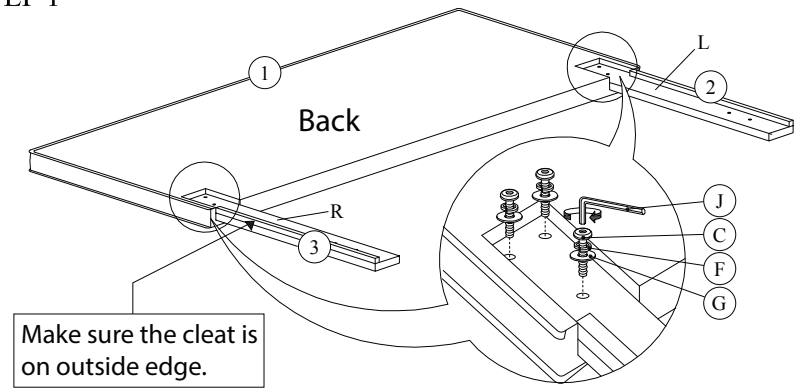


Make sure the cleat is on outside edge.

STEP 2

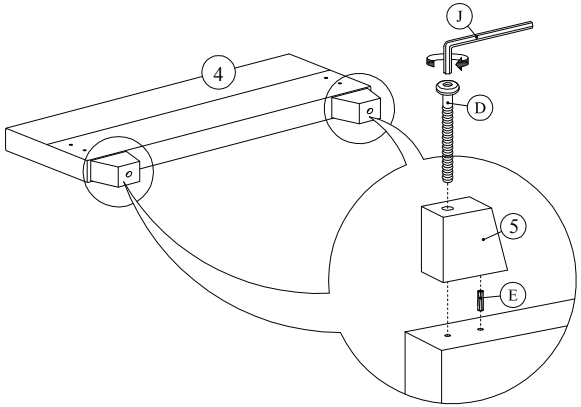


STEP 3

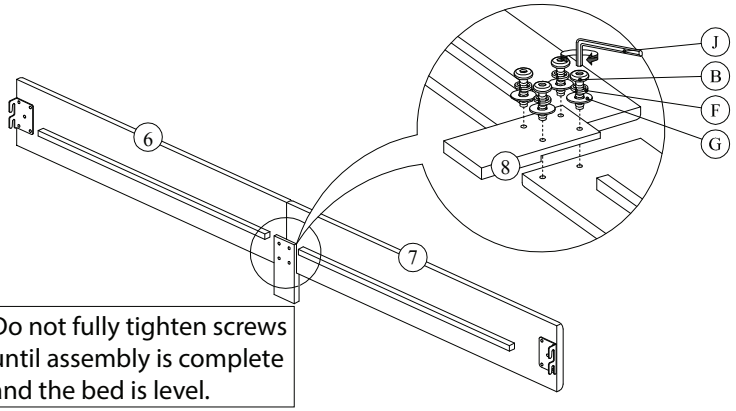


Do not fully tighten screws until assembly is complete and the bed is level.

STEP 4

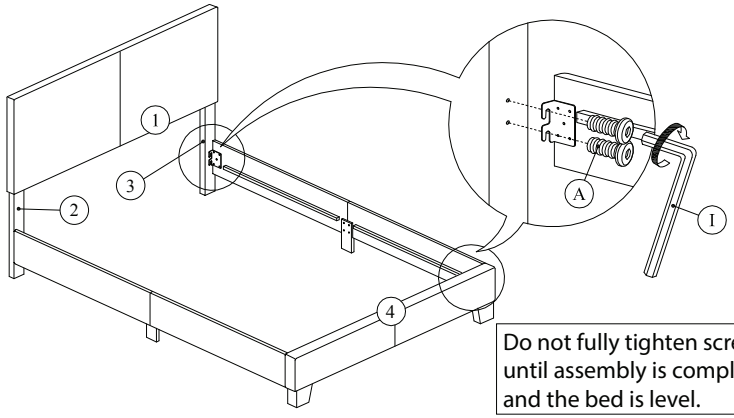


Do not fully tighten screws until assembly is complete and the bed is level.

STEP 5

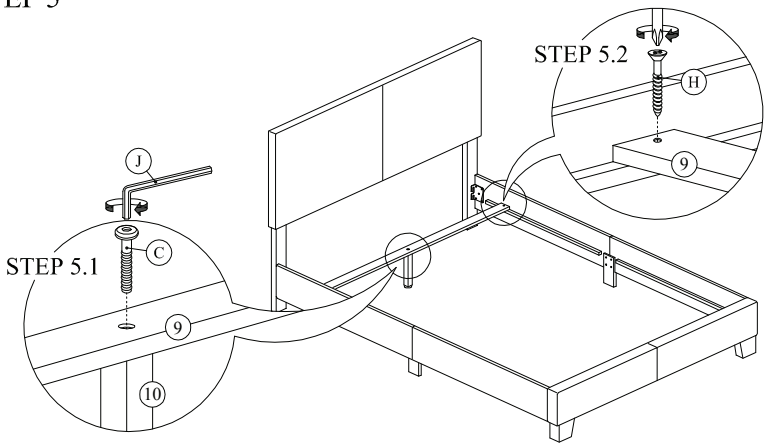


STEP 6

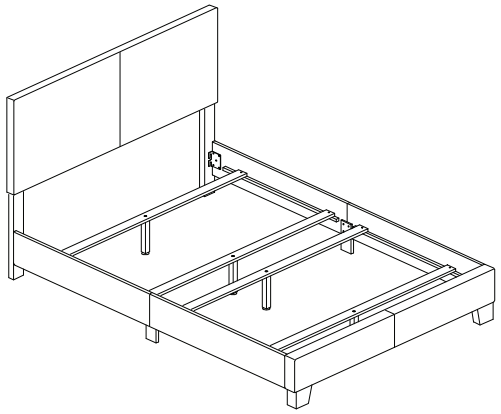

ASSEMBLY COMPLETED