ASSEMBLY INSTRUCTIONS

Furinno®
Fits Space. Fits Budget

www.furinno.com



30 min



x 2



Tool Required

USEFUL HINTS BEFORE YOU START:

1. Read each step carefully before starting.
2. It is important that each step is performed in correct order to avoid difficulties.
3. Identify, sort and count the parts before assembly.
4. Assemble the product on packaging cardboard to prevent scratch or damage.
5. Using uncompatible hardware might cause damage to the product. DO NOT FULLY-TIGHTEN the nut until all nuts are ready assembled.

IMPORTANT NOTES:

* This unit has been designed to support maximum loads:
  SINGLE: 91 kg, DOUBLE: 181 kg,
  KING: 227 kg, SUPER KING : 272 kg
  Exceeding these load limits could cause sagging, instability, product collapse, and/or serious injury.
* Keep all hardware parts out of reach of children.

NEED HELP? For replacement requests or product inquiries, please contact our Customer Service Team by emailing us at **support@furinno.com**. Thank you for selecting Furinno!

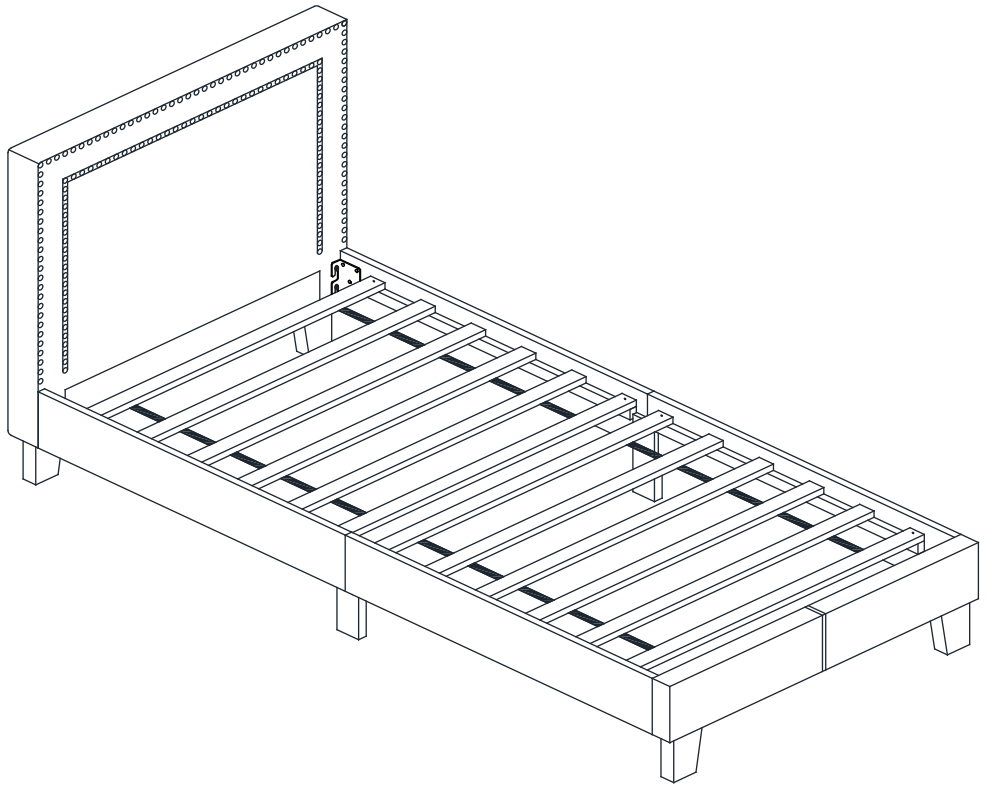

MODEL: FB20235S

FURINNO DOUBLE ROW NAIL HEAD BED FRAME

ASSEMBLY INSTRUCTION

NO	PART LIST	QTY
1	HEADBOARD CUSHION	1PC
2	FOOTBOARD CUSHION	1PC
3	FOOTBOARD LEGS	4PCS
4	SIDE RAIL(L)	2PCS
5	SIDE RAIL(R)	2PCS
6	SIDE RAIL SUPPORT LEG	2PCS
7	ROLL SLAT	2SET

NO	HARDWARE LIST	QTY
A	JCBB SCREW M8 X 20	8PCS
B	JCBC SCREW M6 X 25	8PCS
C	JCBC SCREW M6 X 100	4PCS
D	WOOD DOWEL	4PCS
E	SPRING WASHER	8PCS
F	FLAT WASHER	8PCS
G	SCREW M4 X 32mm	8PCS
H	L - KEY M5 X 65mm	1PC
I	L - KEY M4 X 100mm	1PC

NOTE:
Some parts packed inside the zippered compartment at the back of the headboard.

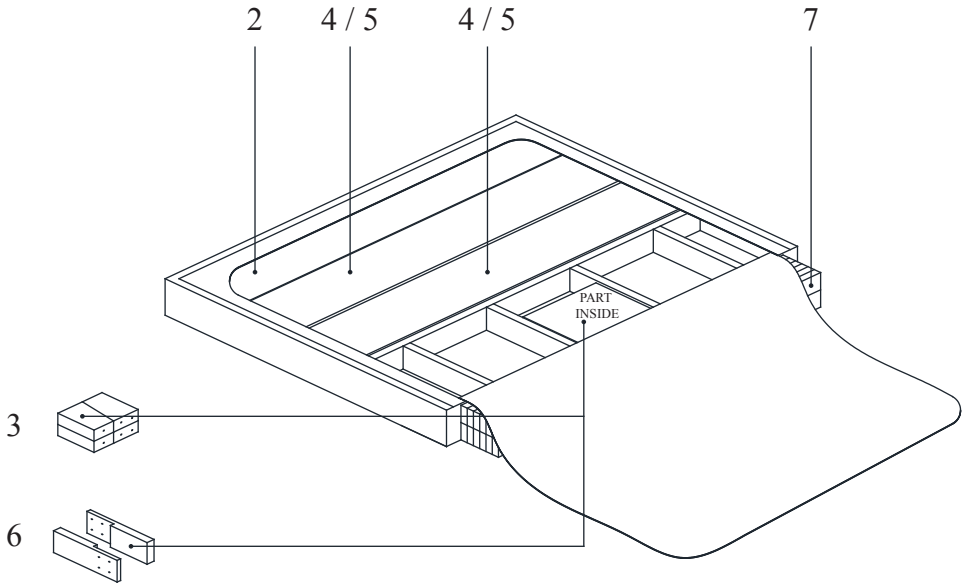

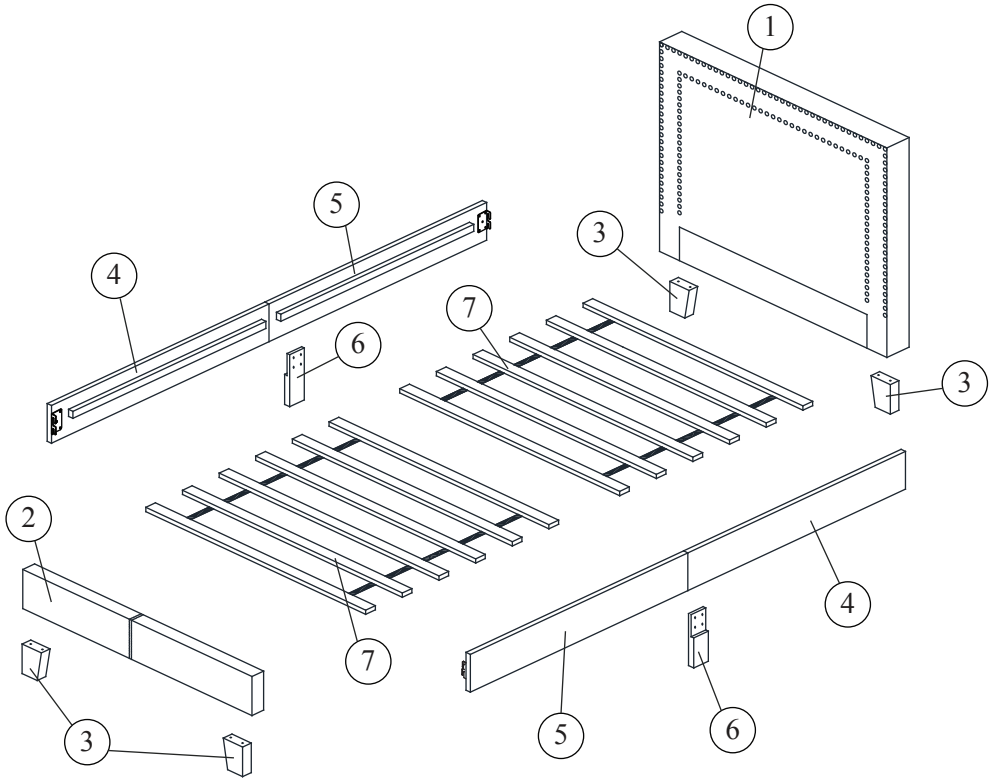

ASSEMBLY INSTRUCTION

STEP 1

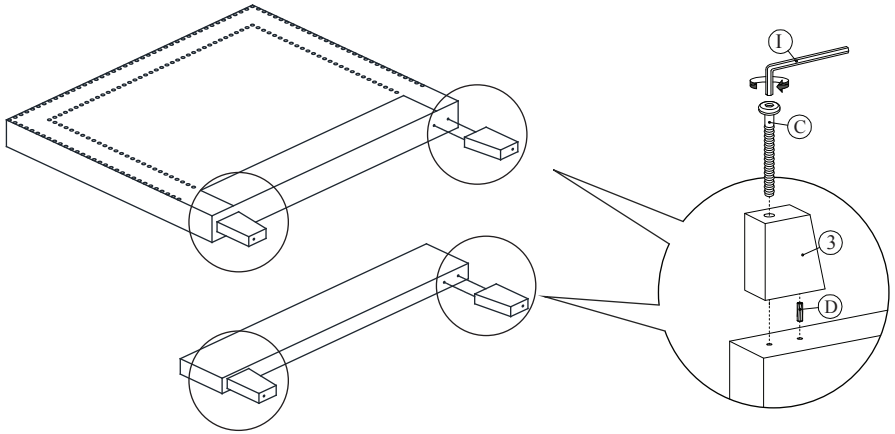

STEP 2

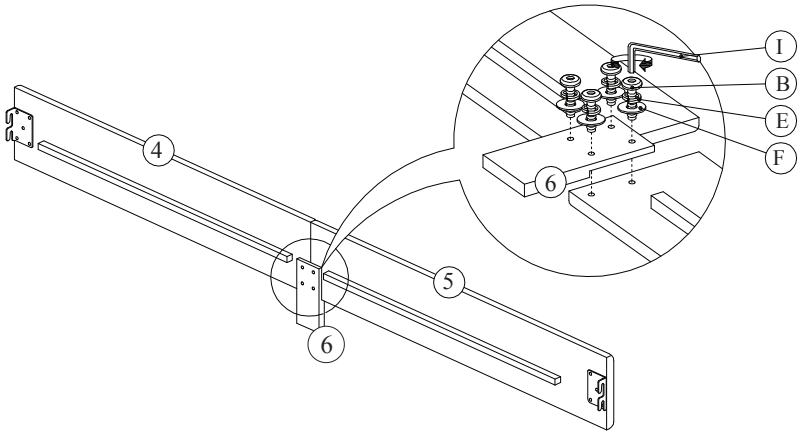

STEP 3

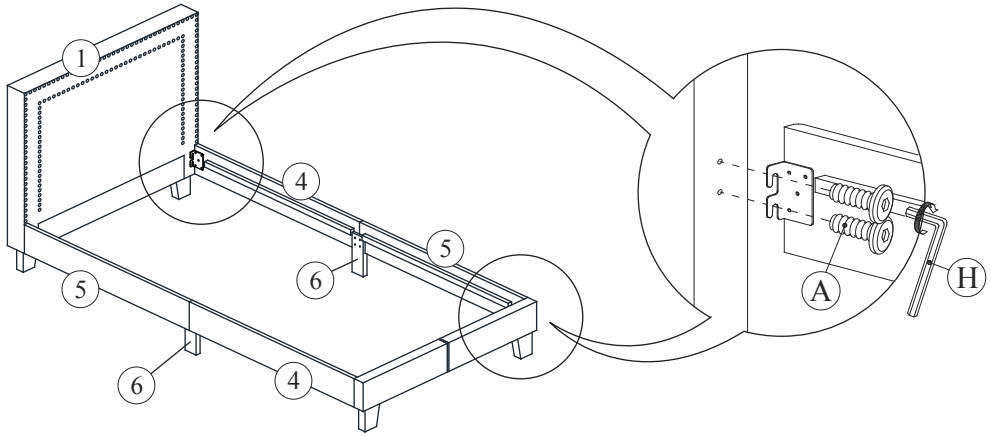

STEP 4

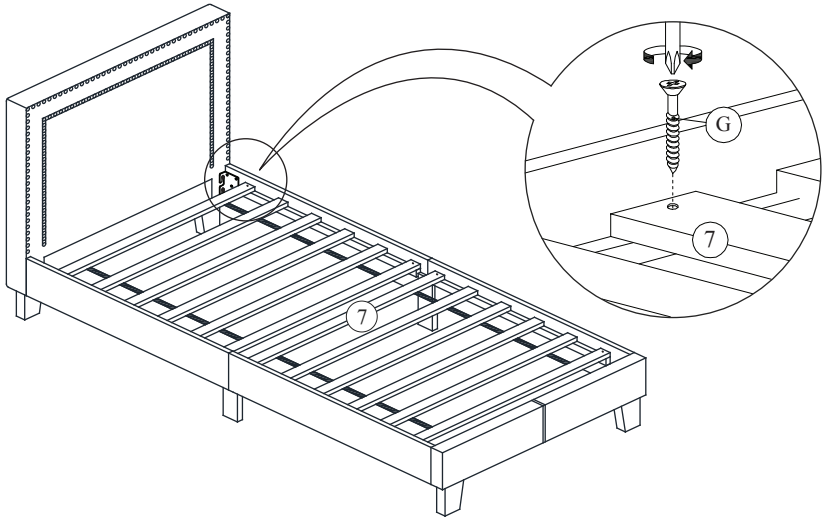

ASSEMBLY
COMPLETED