PLEASE UNZIP THE HEADBOARD FOR PARTS.

We are here!

The rest of the **parts are packed inside** the compartment at the back of the headboard.

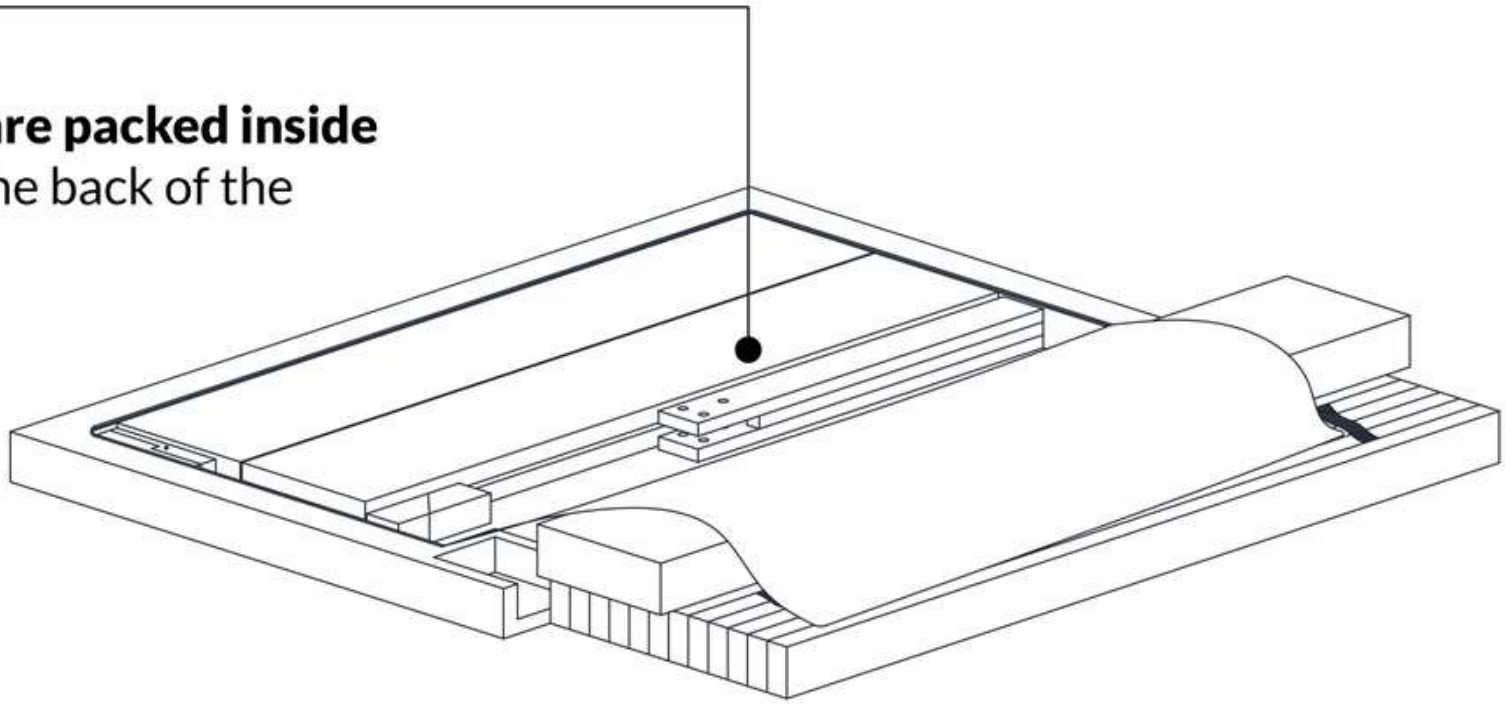

Furinno®

Fits Space, Fits Budget

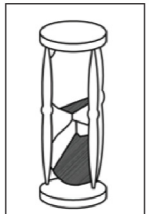

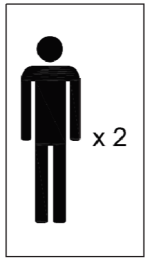

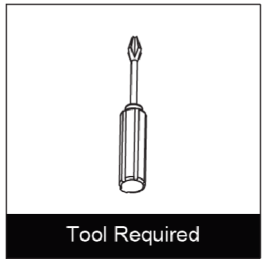

USEFUL HINTS BEFORE YOU START:

1. Read each step carefully before starting.
2. It is important that each step is performed in correct order to avoid difficulties.
3. Identify, sort and count the parts before assembly.
4. Assemble the product n packaging cardboard to prevent scratch or damage.
5. Using uncompatible hardware might cause damage to the product. DO NOT FULLY-TIGHTEN the nut until all nuts are ready assembled.

IMPORTANT NOTES:

* This unit has been designed to support maximum loads:
TWIN & TWIN XL: 200 lbs, FULL: 400 lbs
QUEEN: 500 lbs, KING & CAL.KING: 600 lbs
Exceeding these load limits could cause sagging, instability, product collapse, and/or serious injury.
*Keep all hardware parts out of reach of children.

NEED HELP? For replacement requests or product inquiries, please contact our Customer Service Team by emailing us at **support@furinno.com**. thank you for selecting Furinno!

ASSEMBLY INSTRUCTIONS

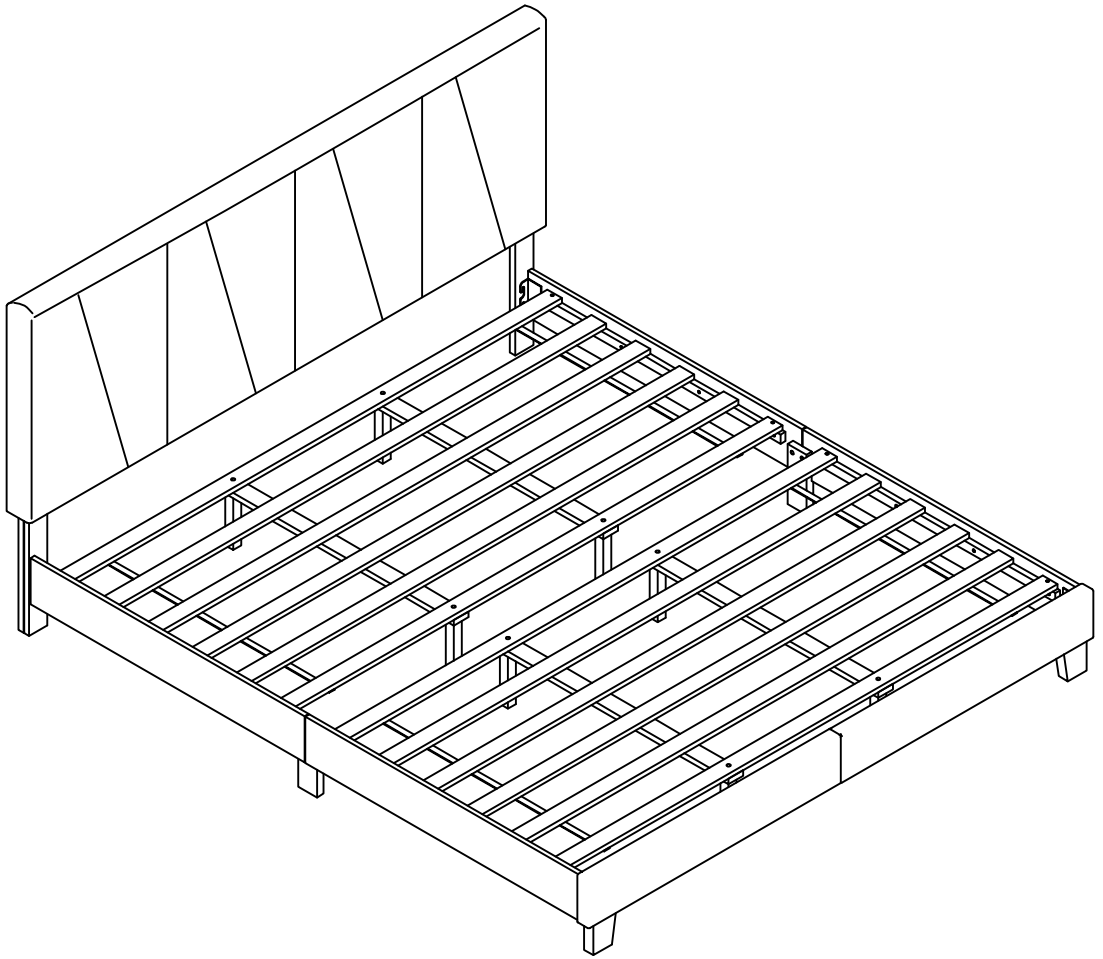

MODEL: FB23080K

GEOMETRIC DESIGN BED FRAME

ASSEMBLY INSTRUCTIONS

NO	PART LIST	QTY
P1	HEADBOARD CUSHION	1PC
P2	LEFT HEADBOARD LEG (with 'L' Label)	1PC
P3	RIGHT HEADBOARD LEG (with 'R' Label)	1PC
P4	FOOTBOARD CUSHION	1PC
P5	FOOTBOARD LEGS	2PCS
P6	SIDE RAIL (A)	2PCS
P7	SIDE RAIL (B)	2PCS
P8	SIDE RAIL SUPPORT LEGS	2PCS
P9	ROLL SLAT	2SET
P10	CENTER SUPPORT RAILS	4PCS
P11	SUPPORT LEGS	8PCS

NO	HARDWARE LIST	QTY
HA	JCBB SCREW M8 X 20	8 PCS + 1 Extra
HB	JCBC SCREW M6 X 35	14 PCS + 1 Extra
HC	JCBC SCREW M6 X 70	10 PCS + 1 Extra
HD	WOOD DOWEL	2 PCS + 1 Extra
HE	SPRING WASHER	14 PCS + 1 Extra
HF	FLAT WASHER	14 PCS + 1 Extra
HG	WOOD SCREW M4 X 32	8 PCS + 1 Extra
HH	HEIGHT ADJUSTER	8 PCS + 1 Extra
HI	ALLEN KEY M5 X 65	1PC
HJ	ALLEN KEY M4 X 100	1PC

NOTE:
Some parts packed inside the zippered compartment at the back of the headboard.

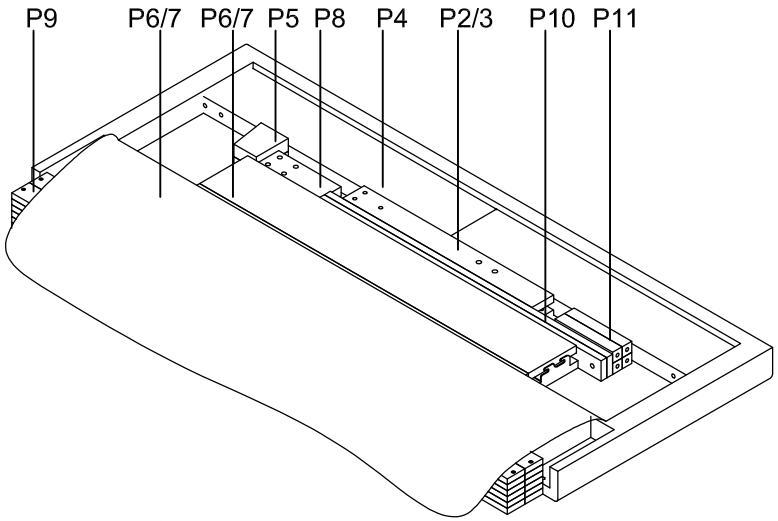

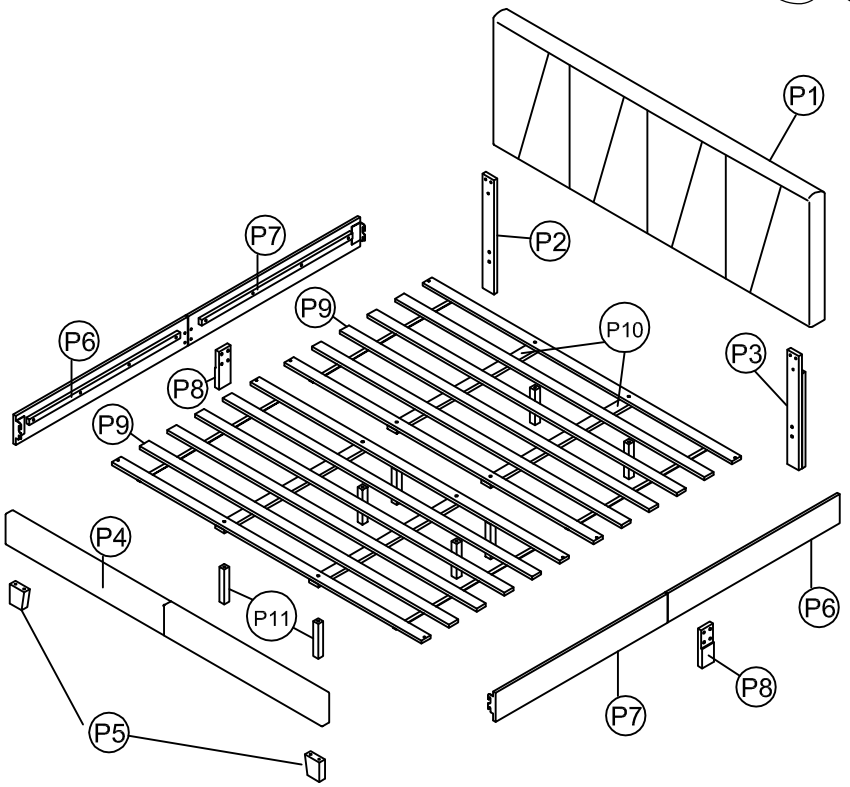

ASSEMBLY INSTRUCTIONS

STEP 1

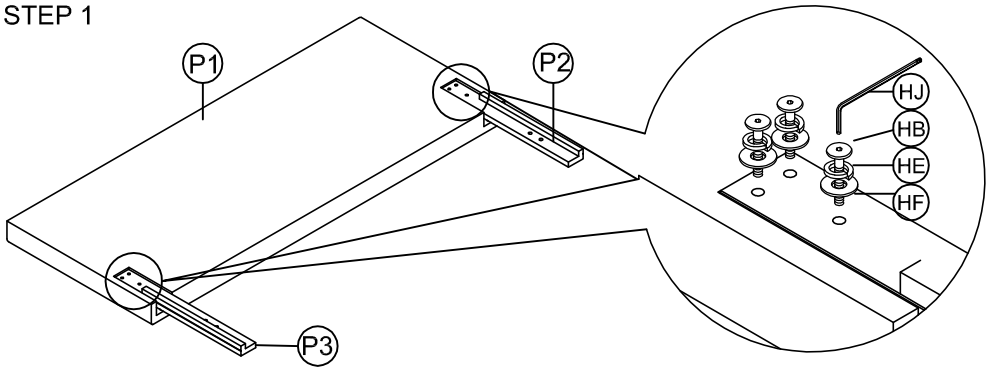

STEP 2

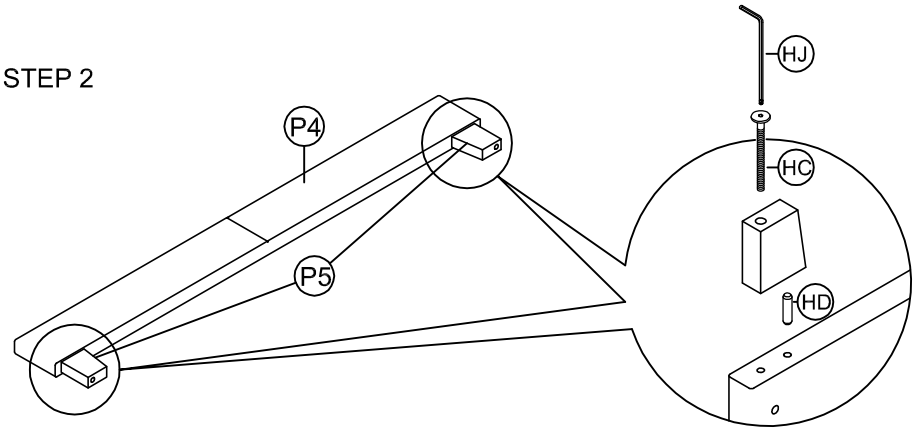

STEP 3

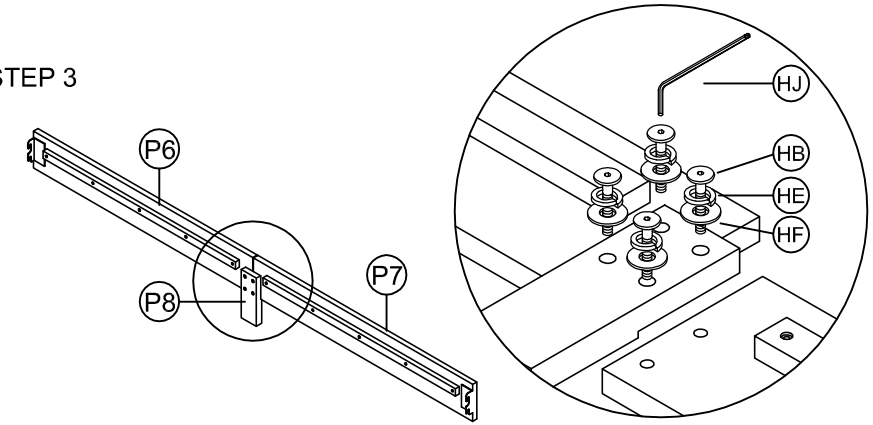

STEP 4

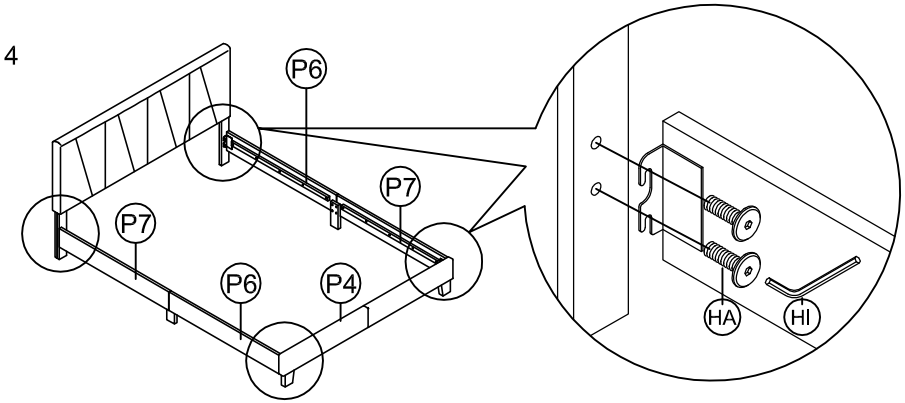

STEP 5

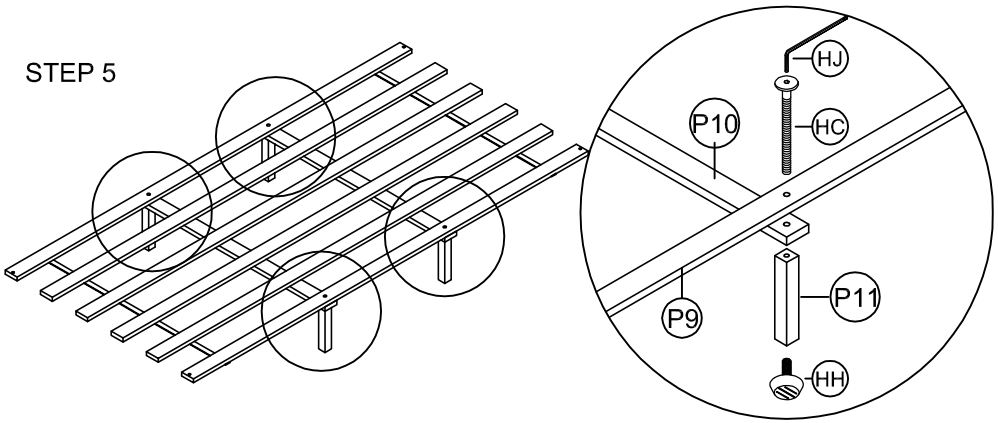

STEP 6

