STEP 3

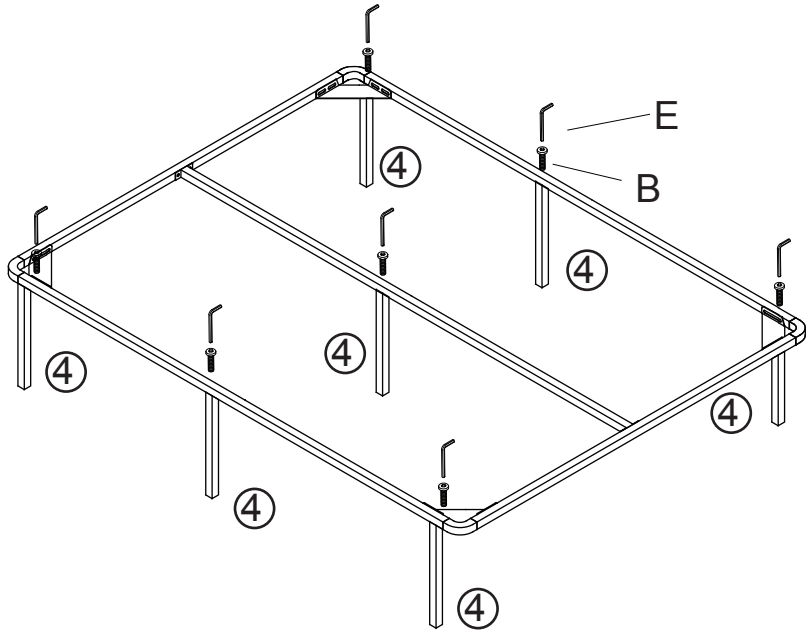

STEP 4

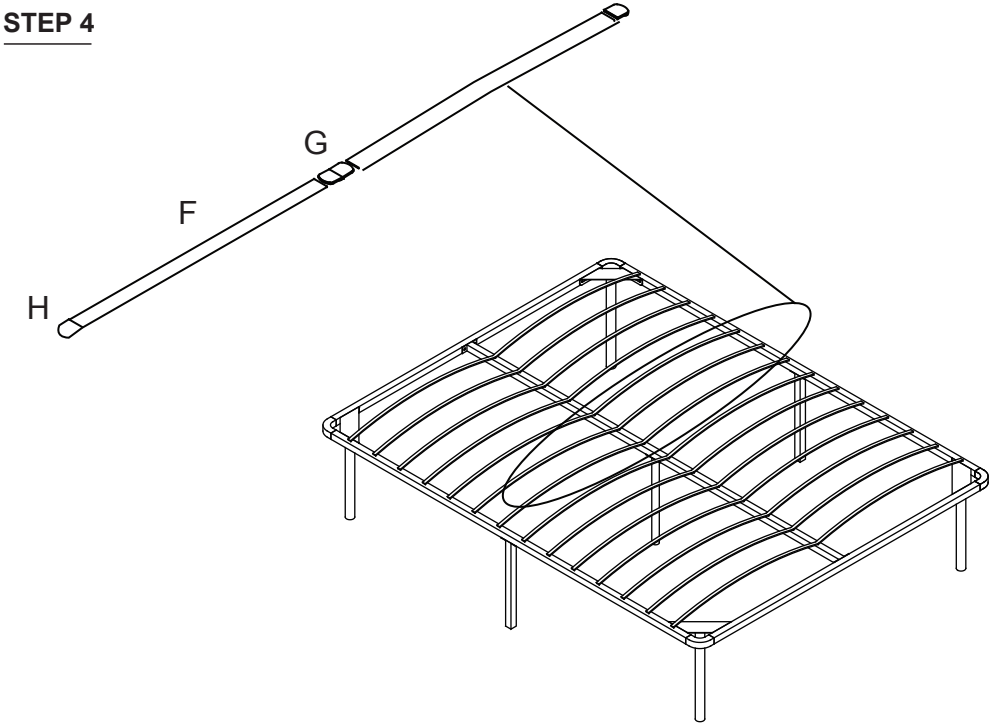

Furinno®
Fits Space. Fits Budget

Assembly Instruction

Furinno Metal Platform Bed Frame
with Wooden Slats

MODEL : **FB3002F**

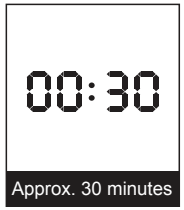

Approx. 30 minutes



Recomm. 2 Person

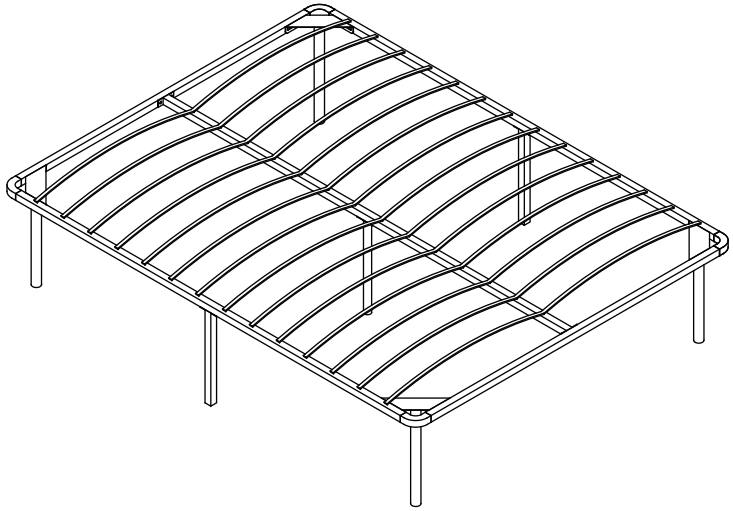

Customer Support

NEED HELP? For replacement requests or product inquiries, please contact our Customer Service Team by emailing us at **support@furinno.com**. Thank you for selecting Furinno!

www.furinno.com

FB3002F20190301

No	Hardware List	Qty
A	M8×40 Screw	20pcs
B	M8×50 Screw	7pcs
C	M8 Nut	20pcs
D	Open End Wrench	1pc
E	M6 Wrench	1pc
F	Wooden Slats	26pcs
G	Center Slat Holder	13pcs
H	End Slat Holder	26pcs
I	Corner Connector	4pcs
J	Corner Bracket	4pcs

No	Parts List	Qty
①	Short Tube	2pcs
②	Long Tube	2pcs
③	Supporting Tube	1pc
④	Support Legs	7pcs

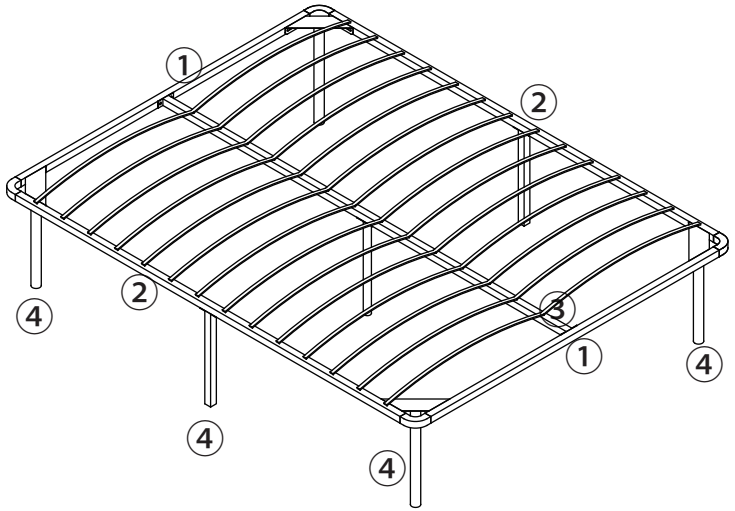

USEFUL HINTS BEFORE YOU START:

1. Read each step carefully before starting.
2. It is important that each step is performed in correct order to avoid difficulties.
3. Identify, sort and count the parts before assembly.
4. Assemble your furniture on packaging cardboard to prevent scratch or damage.
5. Clean the product with mild cleanser using soft damped cloth. Do not use harsh or abrasive cleanser.
6. Using uncompatible hardware might cause damage to product.

NOTE: DO NOT TIGHTEN THE SCREWS UNTIL ALL PARTS ARE IN PLACE.

STEP 1

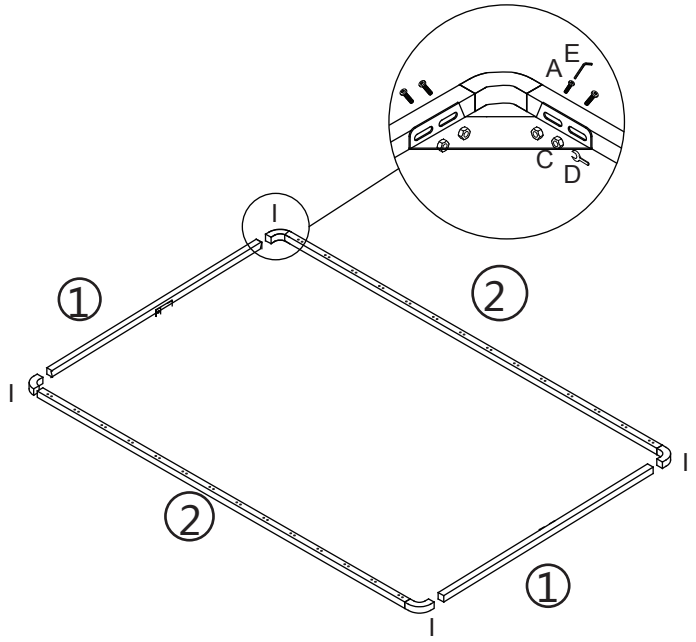

STEP 2

