STEP 3

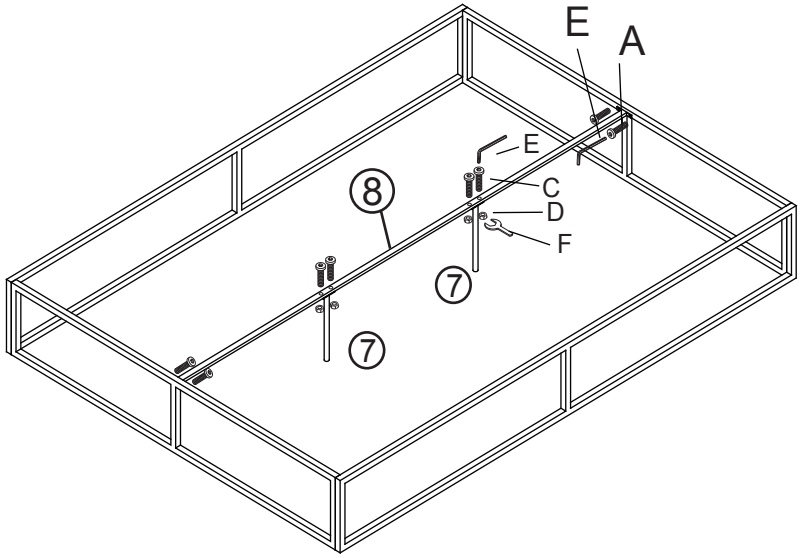

STEP 4

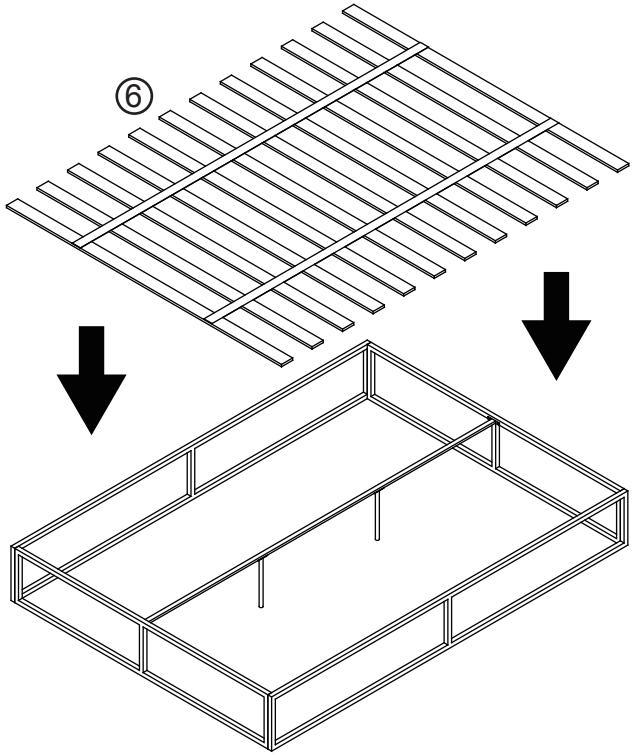

Furinno®
Fits Space. Fits Budget

Assembly Instruction

Furinno Metal Bed Frame Foundation
with Wooden Slats

MODEL : **FB3003F**

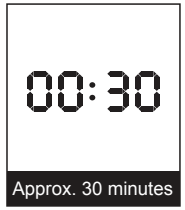



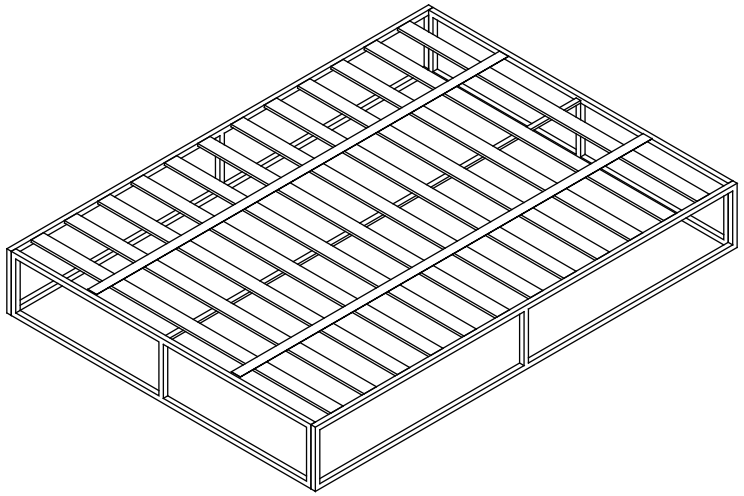

Customer Support

NEED HELP? For replacement requests or product inquiries, please contact our Customer Service Team by emailing us at **support@furinno.com**. Thank you for selecting Furinno!

www.furinno.com

FB3003F20190301

No	Hardware List	Qty
A	M6×15 Screw	28pcs
B	M6×35 Screw	4pcs
C	M8×25 Screw	4pcs
D	M8 Nut	4pcs
E	M6 Wrench	1pc
F	Open End Wrench	1pc

No	Parts List	Qty
①	Side Support	2pcs
②	Side Short Tube	2pcs
③	Upper Support	2pcs
④	Bottom Support	2pcs
⑤	Bed Head Short Tube	2pcs
⑥	Bed Slats	1pc
⑦	Support Legs	2pcs
⑧	Long Supporting Tube	2pcs

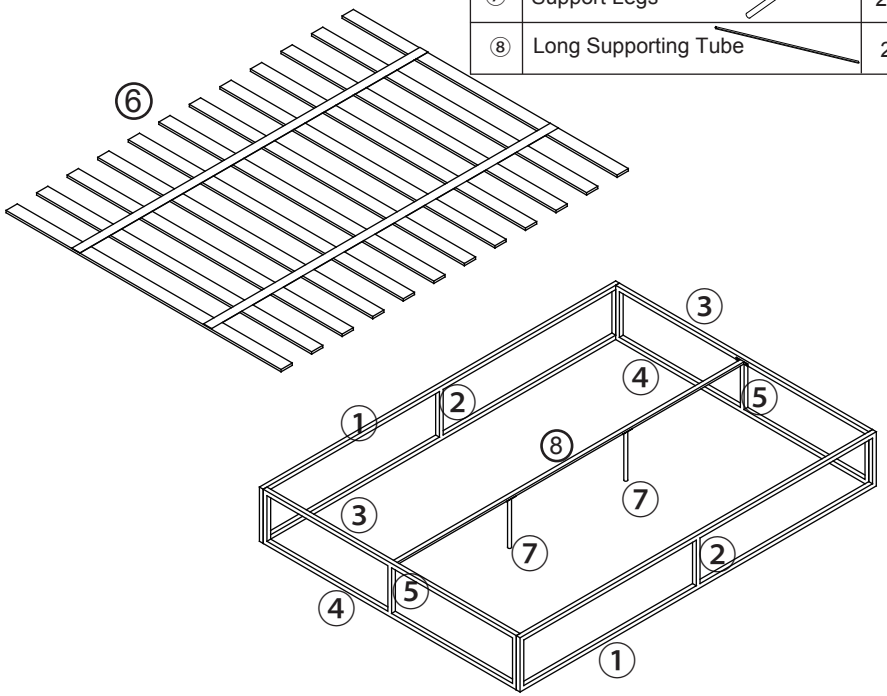

USEFUL HINTS BEFORE YOU START:

1. Read each step carefully before starting.
2. It is important that each step is performed in correct order to avoid difficulties.
3. Identify, sort and count the parts before assembly.
4. Assemble your furniture on packaging cardboard to prevent scratch or damage.
5. Clean the product with mild cleanser using soft damped cloth. Do not use harsh or abrasive cleanser.
6. Using uncompatible hardware might cause damage to product.

NOTE: DO NOT TIGHTEN THE SCREWS UNTIL ALL PARTS ARE IN PLACE.

STEP 1

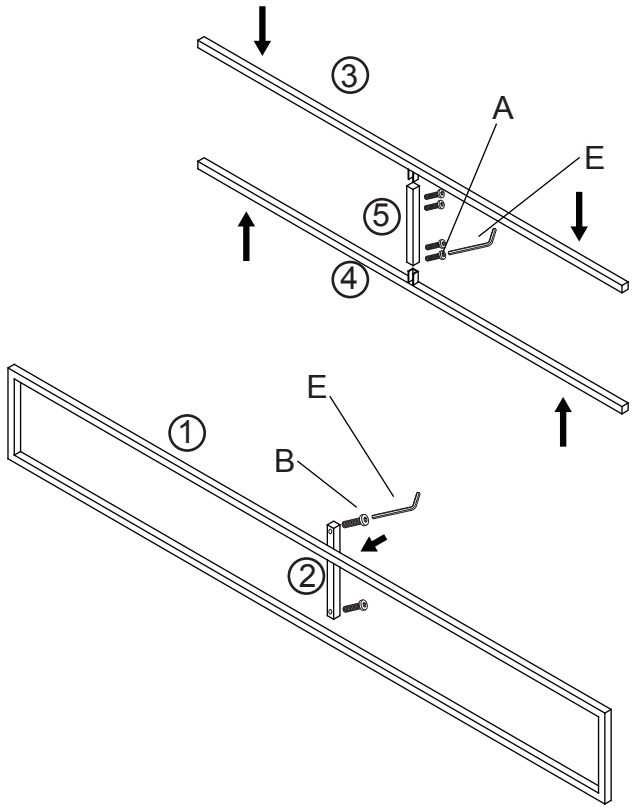

STEP 2

