Furinno®
Fits Space. Fits Budget

www.furinno.com

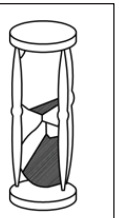
30 min


x 2

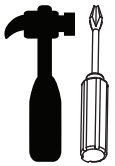
Tools Required

USEFUL HINTS BEFORE YOU START:

1. Read each step carefully before starting.
2. It is important that each step is performed in correct order to avoid difficulties.
3. Identify, sort and count the parts before assembly.
4. Assemble the product on packaging cardboard to prevent scratch or damage.
5. Using uncompatible hardware might cause damage to the product. DO NOT FULLY-TIGHTEN the nut until all nuts are ready assembled.

IMPORTANT NOTES:

* This unit has been designed to support maximum 500 lbs. Exceeding these load limits could cause sagging, instability, product collapse, and/or serious injury.
* Keep all hardware parts out of reach of children.

NEED HELP? For replacement requests or product inquiries, please contact our Customer Service Team by emailing us at **support@furinno.com**. Thank you for selecting Furinno!

ASSEMBLY INSTRUCTIONS

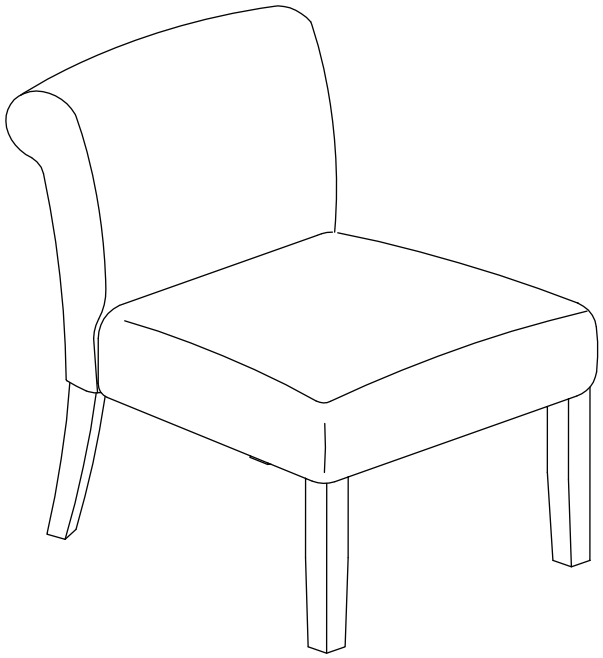

MODEL: FC18700

FURINNO MODERN ACCENT CHAIR

ASSEMBLY INSTRUCTION

NO	PARTLIST	QTY
1	CHAIR BACK	1 PC
2	CUSHION SEAT	1 PC
3	LEG	2 PCS

NO	HARDWARE LIST	QTY
A	JCBC SCREWS M6 X 40mm	2 PCS
B	JCBC SCREWS M6 X 60mm	4 PCS
C	JCBC SCREWS M6 X 80mm	4 PCS
D	SPRING WASHERS	10 PCS
E	FLAT WASHERS	10 PCS
F	L KEY M4 X 65mm	1 PC

STEP 1

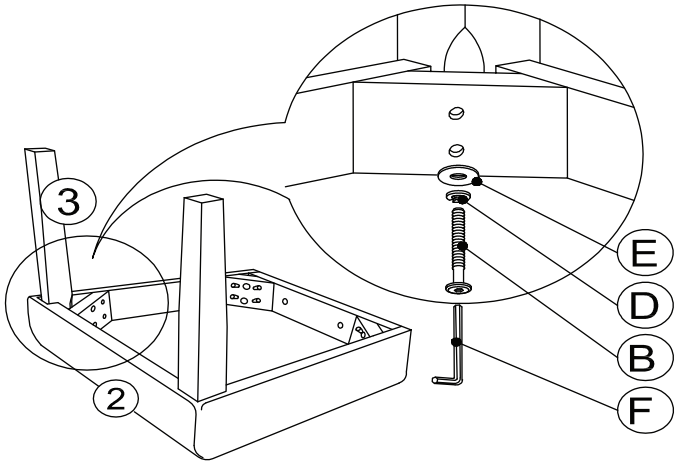

STEP 2

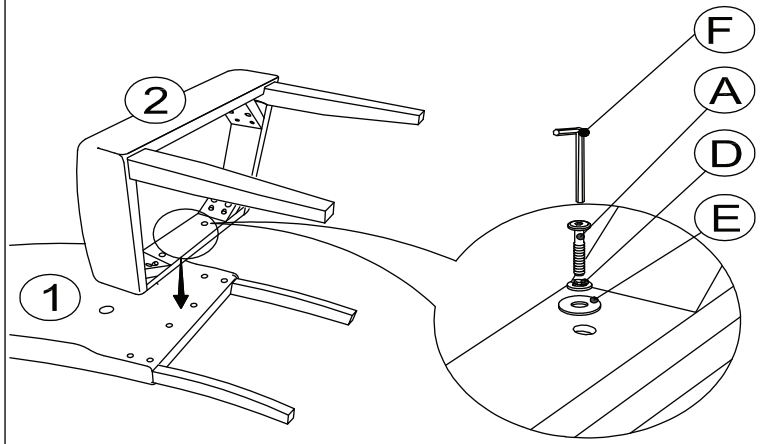

STEP 3

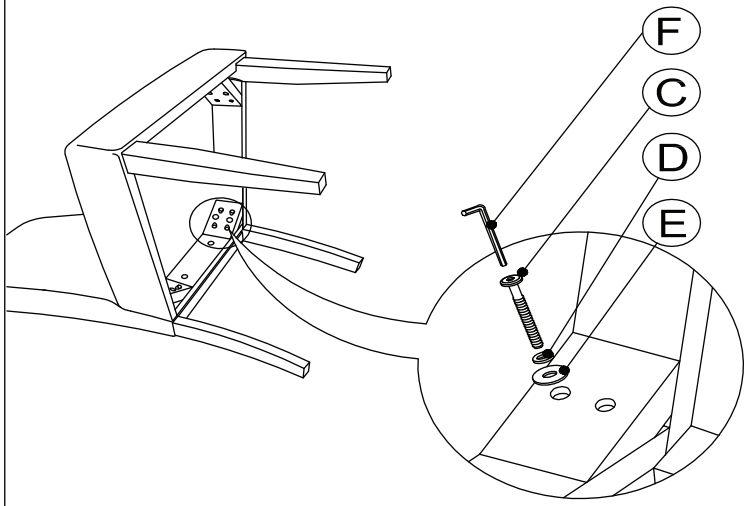

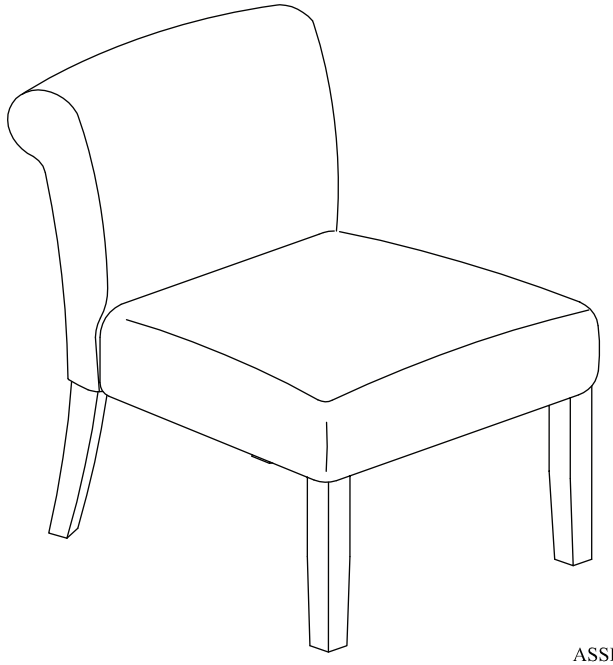

ASSEMBLY COMPLETED