FCG126

Furinno L-Shaped Metal Frame Computer Desk

Furinno
Fits Space. Fits Budget

www.furinno.com

NEED HELP? For replacement requests or product inquiries, please contact our Customer Service Team by emailing us at **support@furinno.com**. Thank you for selecting Furinno!

1

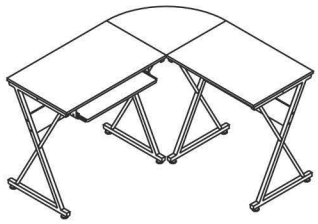

2

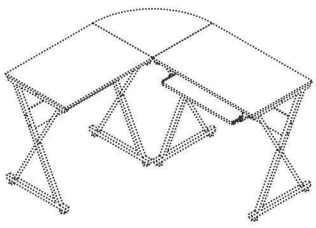



45 min



x 1

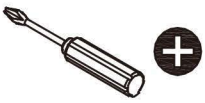

Tools Required

USEFUL HINTS BEFORE YOU START:

1. Read each step carefully before starting.
2. It is important that each step is performed in correct order to avoid difficulties.
3. Identify, sort and count the parts before assembly.
4. Assemble your furniture on packaging cardboard to prevent scratch or damage.
5. Clean the product with mild cleanser using soft damped cloth. Do not use harsh or abrasive cleanser.
6. Using uncompatible hardware might cause damage to product.

Ax2 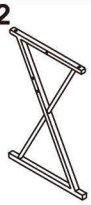	Bx2 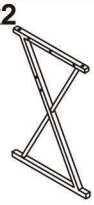	Cx1  558X240X15	Dx1  640X116X15	Ex1  740X116X15	Fx1  800X480X15	Gx1  700X480X15	Hx1  480X480X15
Ix1 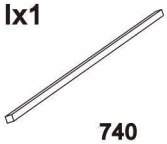 740	Jx1 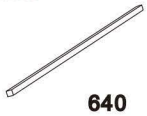 640	Kx2 	Lx2  L2 L1	Mx4 	Nx8 	Ox4  ST3.5x14	Px8  M6x10
Qx4  M4X6	Rx4 M4 Sx4 M6	Tx8  ST5X60	Ux4  M6X60	Vx2  M6X70	Wx12  M6X35	Xx2  M6X30	Yx2  M6X45

STEP 1

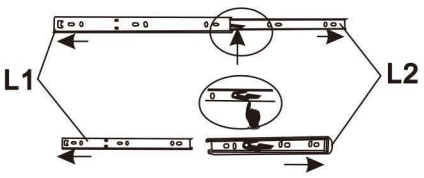

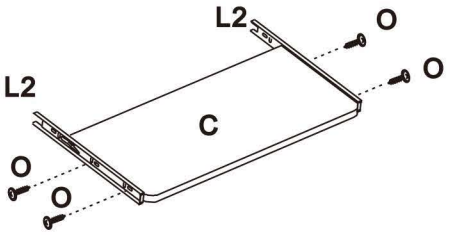

STEP 2-1

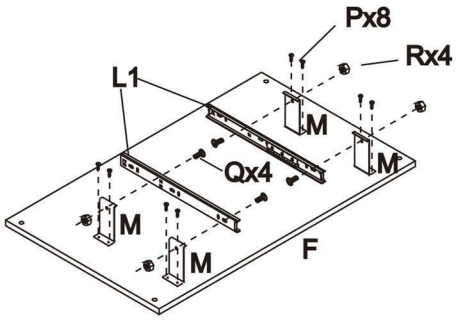

Back label for hole ref of Px8



STEP 2-2

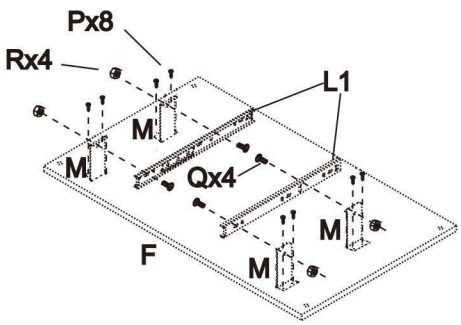

Back label for hole ref of Px8



STEP 3-1

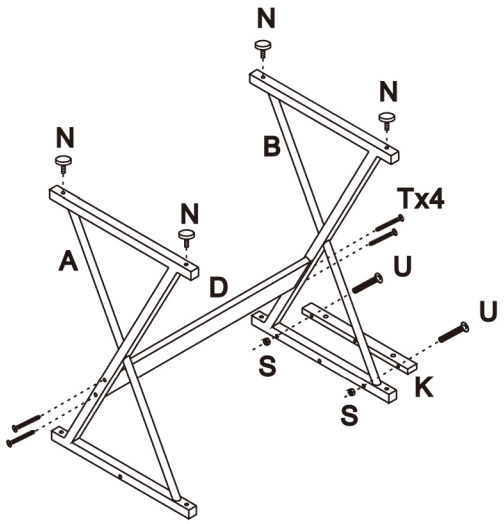

STEP 3-2

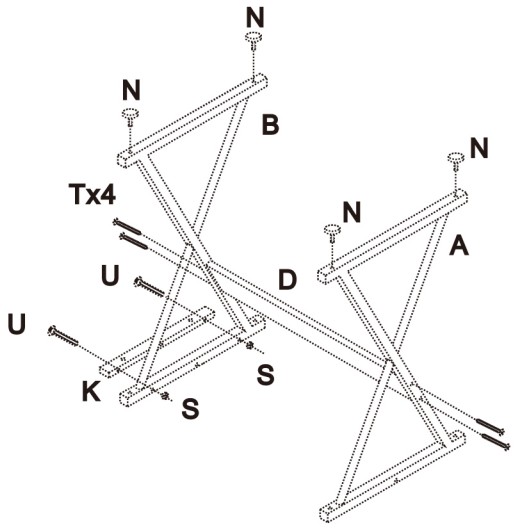

STEP 4-1

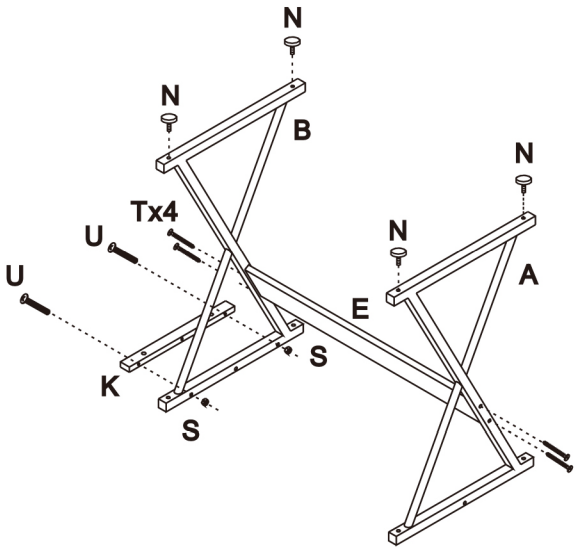

STEP 4-2

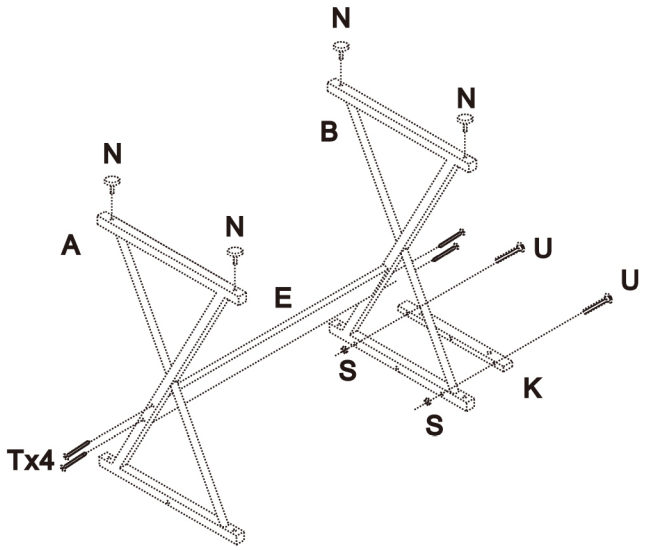

STEP 5-1

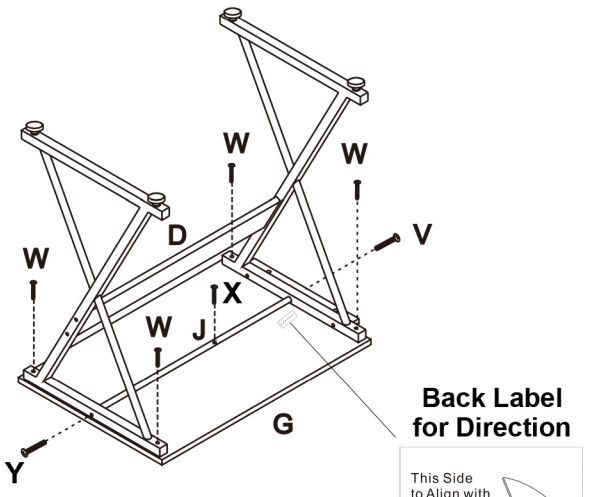

STEP 5-2

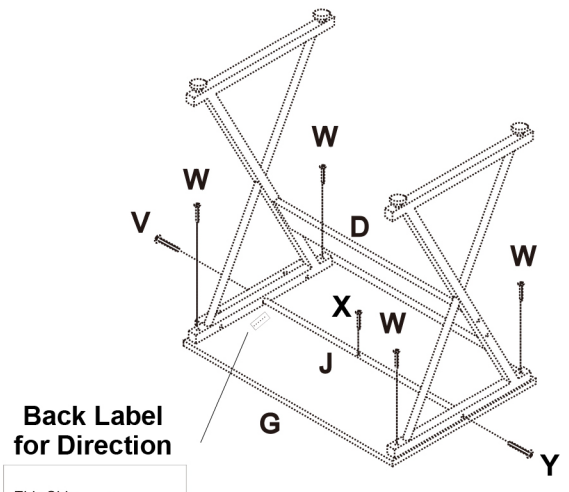

STEP 6-1

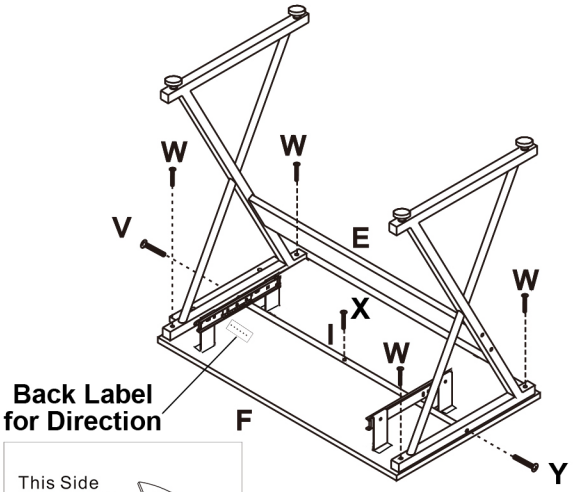



STEP 6-2

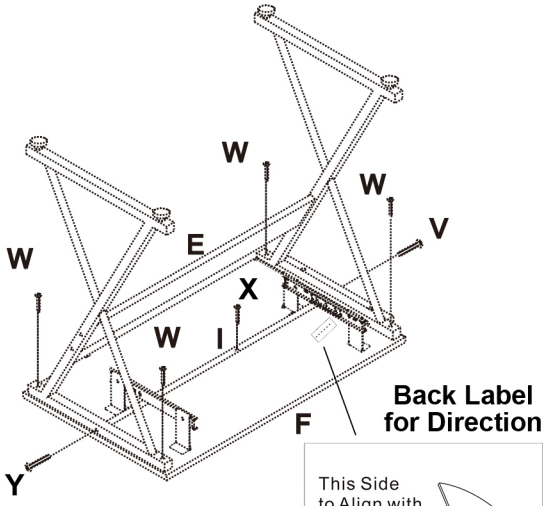

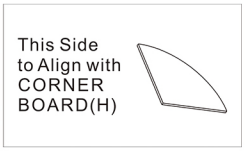

STEP 7-1

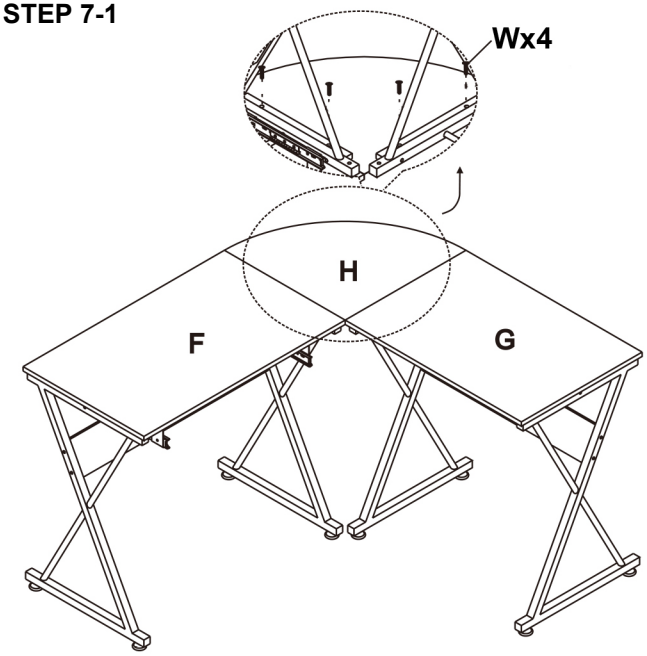

STEP 7-2

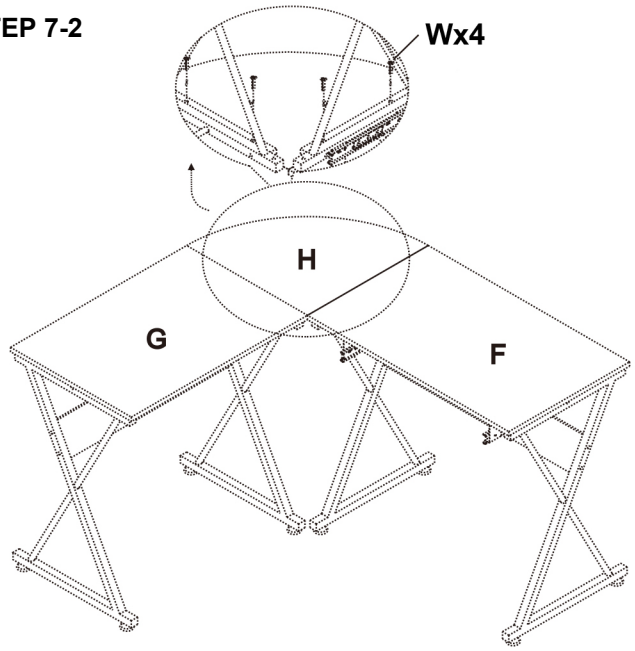

STEP 8-1

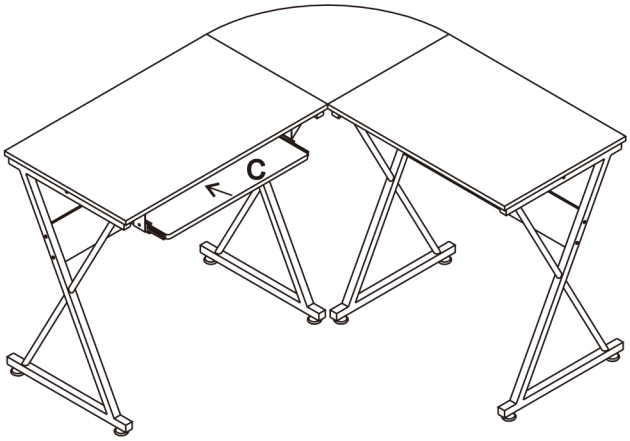

STEP 8-2

