STEP 3

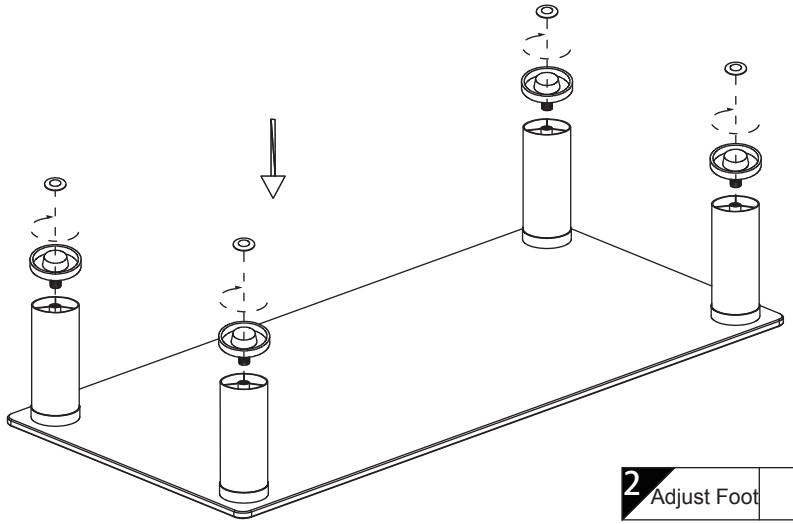

2	Adjust Foot	×4
3	Spacer	×4

STEP 4

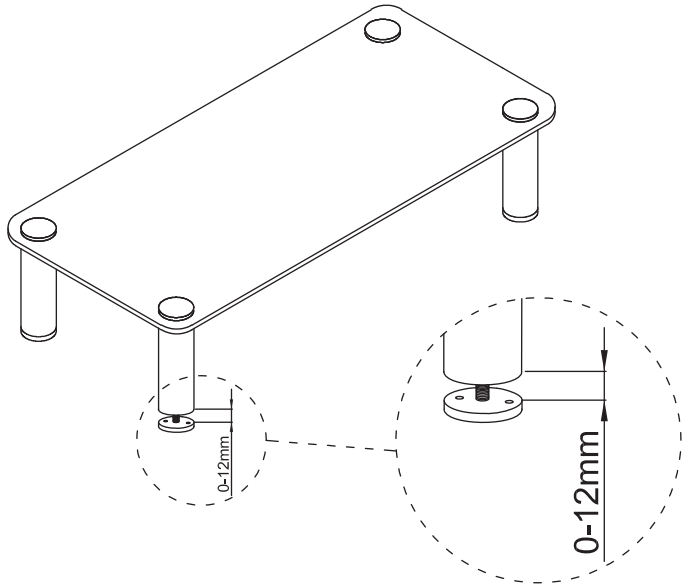

Furinno®
Fits Space. Fits Budget

Assembly Instruction

Furinno Glass Monitor Stand

MODEL : **FCM1820-02**

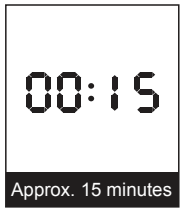

Approx. 15 minutes


Recomm. 1 Person

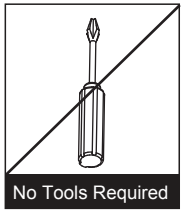
No Tools Required

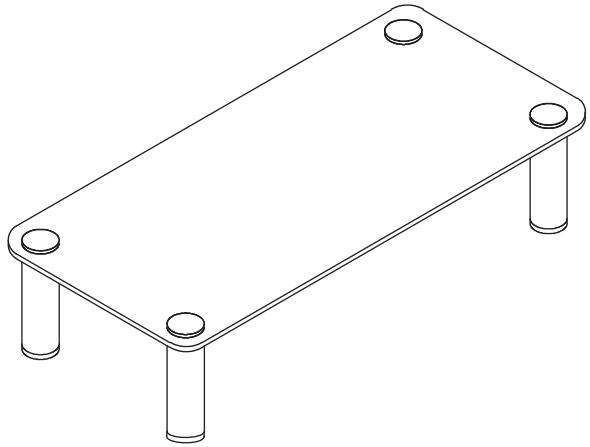

Customer Support

NEED HELP? For replacement requests or product inquiries, please contact our Customer Service Team by emailing us at **support@furinno.com**. Thank you for selecting Furinno!

www.furinno.com

FCM1820-0220181126

No	Hardware List	Qty
①	Nut	4pcs
②	Adjust Foot	4pcs
③	Spacer	4pcs

No	Parts List	Qty
A	Panel	1pc
B	Foot	4pcs

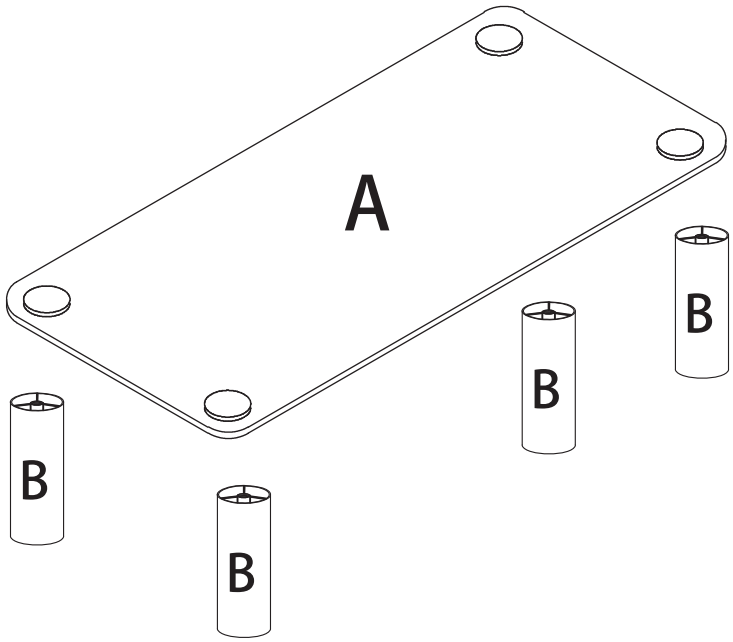

USEFUL HINTS BEFORE YOU START:

1. Read each step carefully before starting.
2. It is important that each step is performed in correct order to avoid difficulties.
3. Identify, sort and count the parts before assembly.
4. Assemble your furniture on packaging cardboard to prevent scratch or damage.
5. Clean the product with mild cleanser using soft damped cloth. Do not use harsh or abrasive cleanser.
6. Using uncompatible hardware might cause damage to product.

STEP 1

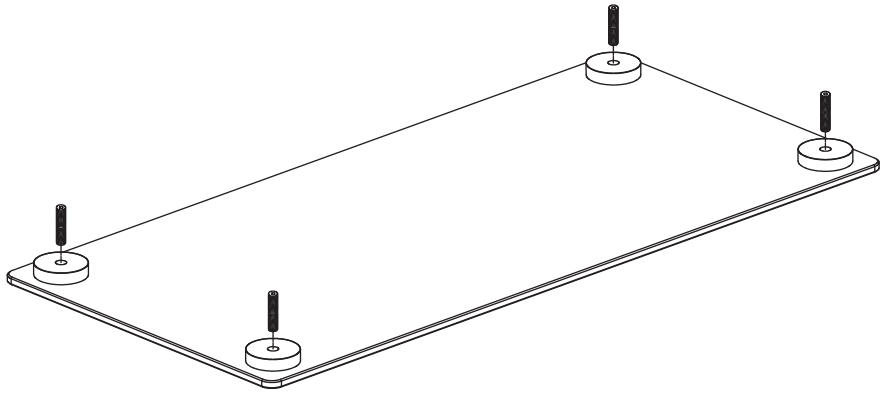



STEP 2

