STEP 3

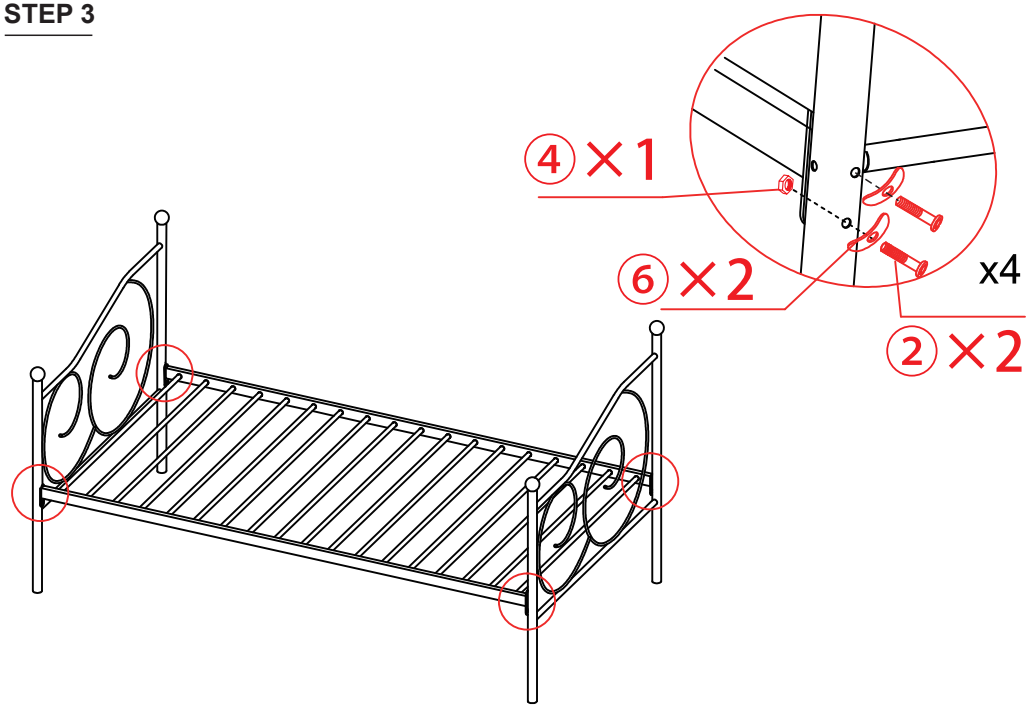

STEP 4

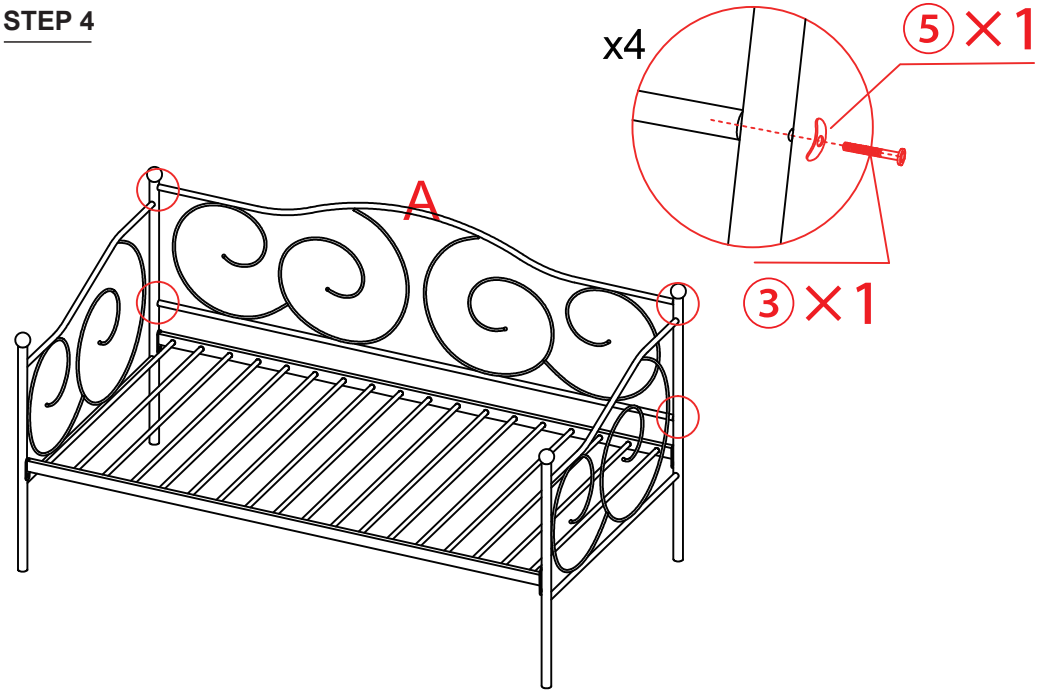

Furinno®
Fits Space. Fits Budget

Assembly Instruction

Furinno Metal Daybed

MODEL : **FDB222T**

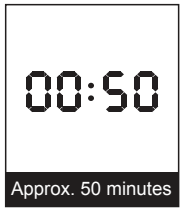





Customer Support

NEED HELP? For replacement requests or product inquiries, please contact our Customer Service Team by emailing us at **support@furinno.com**. Thank you for selecting Furinno!

www.furinno.com

FDB222T20190228

No	Hardware List	Qty
①	M6×15 Screw	4pcs
②	M8×45 Screw	8pcs
③	M6×45 Screw	12pcs
④	M8 Nut	4pcs
⑤	Small Washer	12pcs
⑥	Big Washer	8pcs
⑦	M6 Wrench	1pc
⑧	Open End Wrench	1pc

No	Parts List	Qty
A	Back Rest	1pc
B	Back Legs	2pcs
C	Front Legs	2pcs
D	Side Rack	2pcs
E	Nut Round Tube	2pcs
F	Round Tube	16pcs
G	Support Bar	2pcs

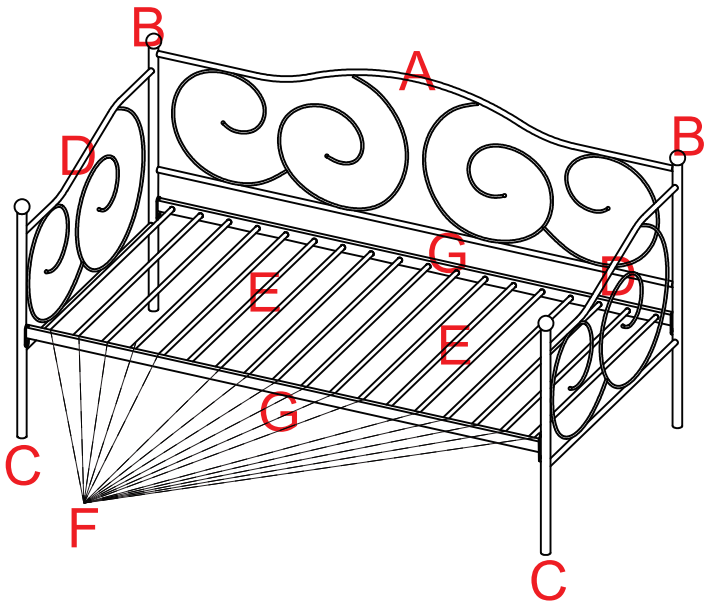

USEFUL HINTS BEFORE YOU START:

1. Read each step carefully before starting.
2. It is important that each step is performed in correct order to avoid difficulties.
3. Identify, sort and count the parts before assembly.
4. Assemble your furniture on packaging cardboard to prevent scratch or damage.
5. Clean the product with mild cleanser using soft damped cloth. Do not use harsh or abrasive cleanser.
6. Using uncompatible hardware might cause damage to product.

NOTE: DO NOT TIGHTEN THE SCREWS UNTIL ALL PARTS ARE IN PLACE.

STEP 1

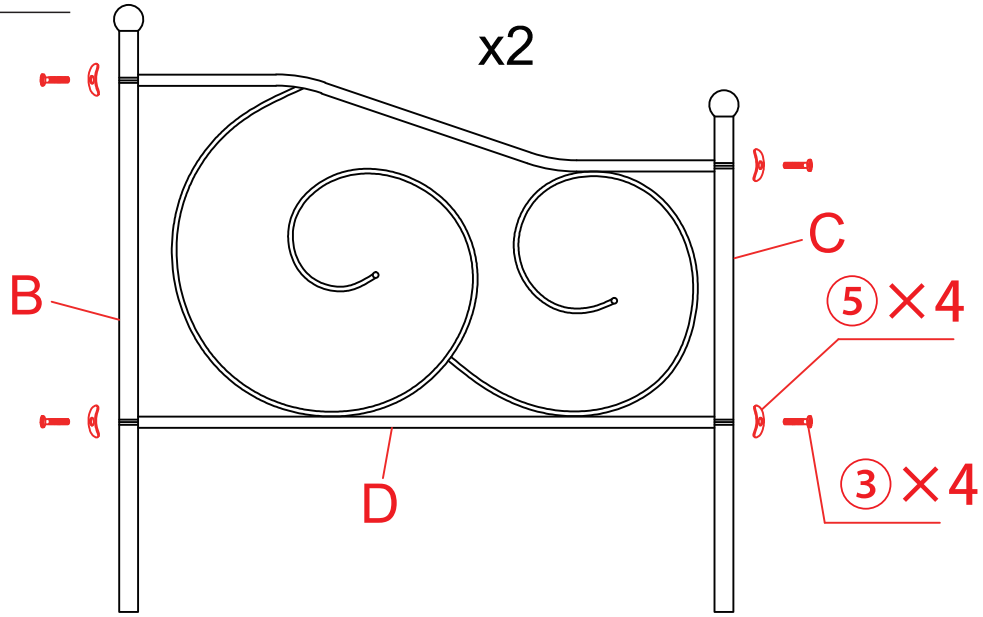

STEP 2

