FG180907

Furinno Outdoor Patio Furniture Set

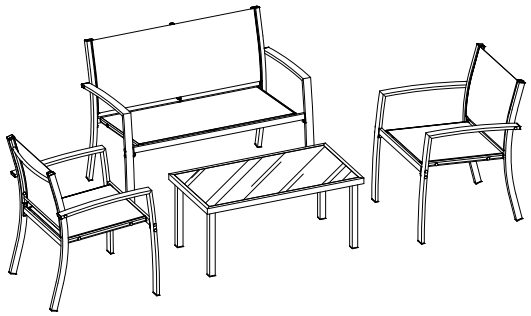

www.furinno.com

NEED HELP? For replacement requests or product inquiries, please contact our Customer Service Team by emailing us at **support@furinno.com**. Thank you for selecting Furinno!

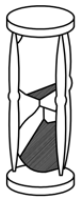
40 min


x 1

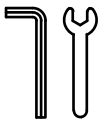
Tools Included

USEFUL HINTS BEFORE YOU START:

1. Read each step carefully before starting.
2. It is important that each step is performed in correct order to avoid difficulties.
3. Identify, sort and count the parts before assembly.
4. Assemble your furniture on packaging cardboard to prevent scratch or damage.
5. Clean the product with mild cleanser using soft damped cloth. Do not use harsh or abrasive cleanser.
6. Using uncompatible hardware might cause damage to product.

HARDWARE & PARTS LIST

AR x3	**AL** x3	**B** x6	**C** x2	**D** x2
			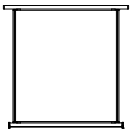	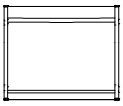

E x1	**F** x1	**G** x1	**H** x4	**J1** x1 **J2** x1
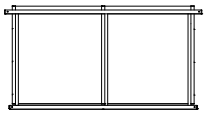	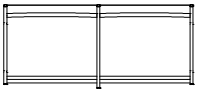	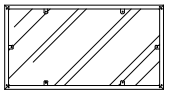	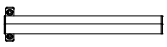	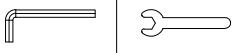 Tool

K x20	**L** x13	**M** x18	**N** x51	**O** x7
				
M6x15mm	M6x25mm	M6x55mm	Washer(M6)	Screw(M6)

P x65	**Q** x21
	
Plastic End Cap#1	Plastic End Cap#2

REMINDER: Please do not tighten the screws until all of them are in right positions.

STEP 1

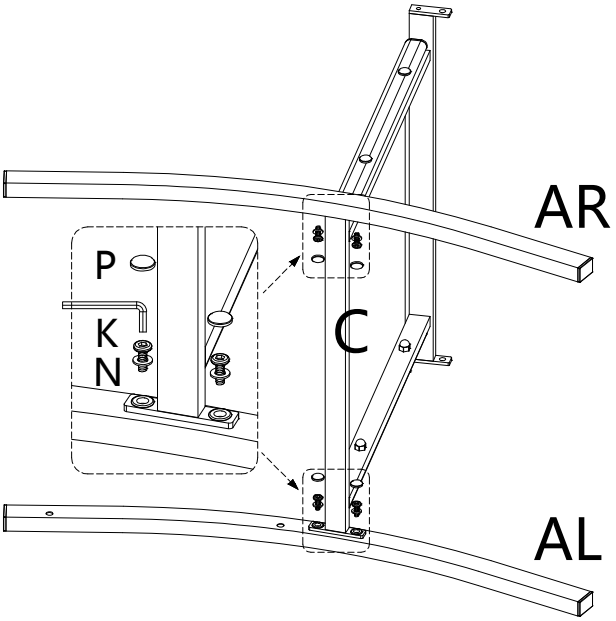

STEP 2

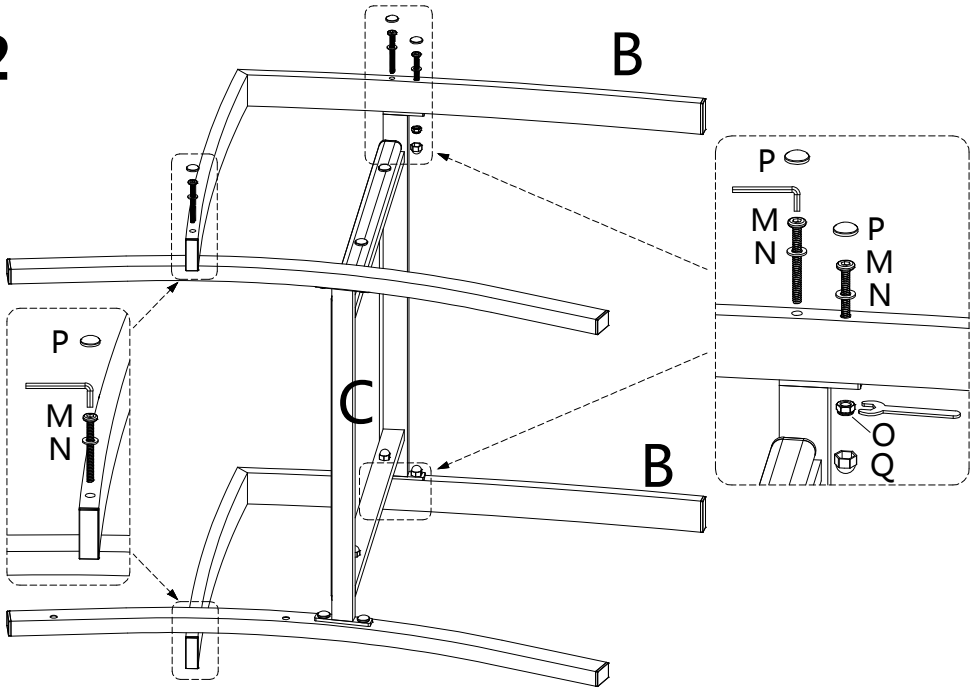

STEP 3

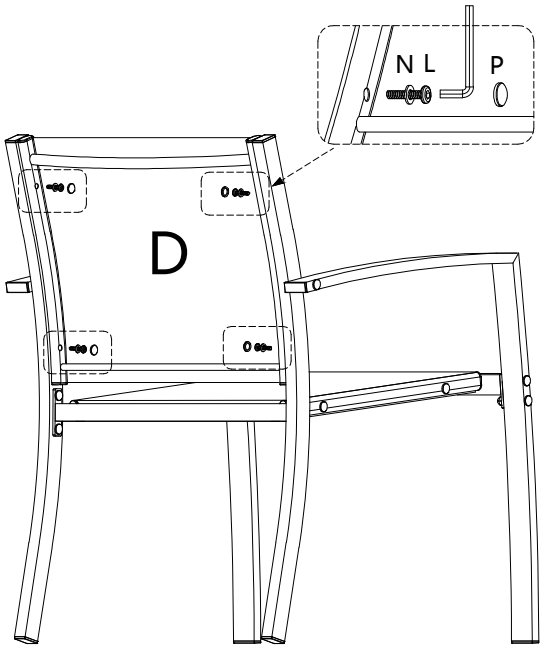

STEP 4

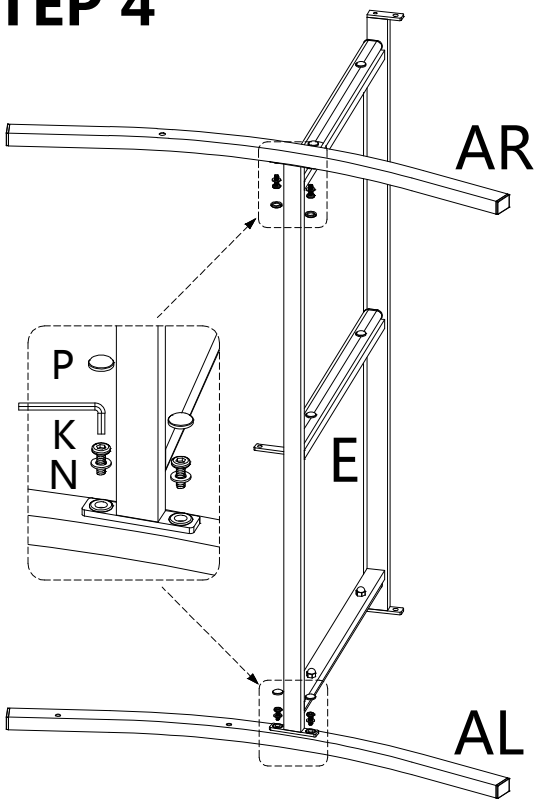

STEP 5

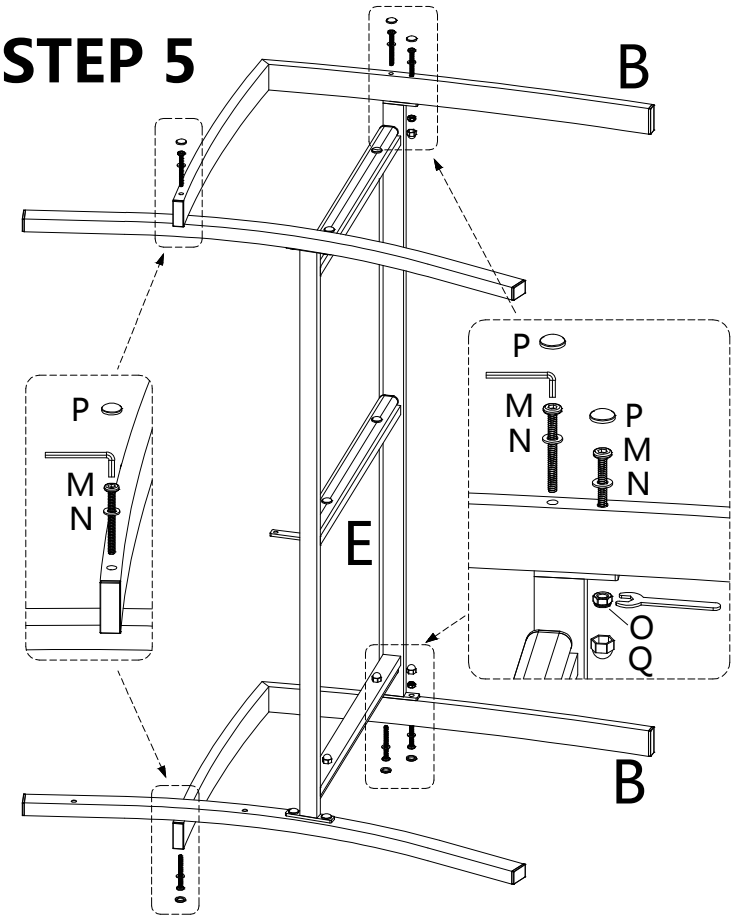

STEP 6

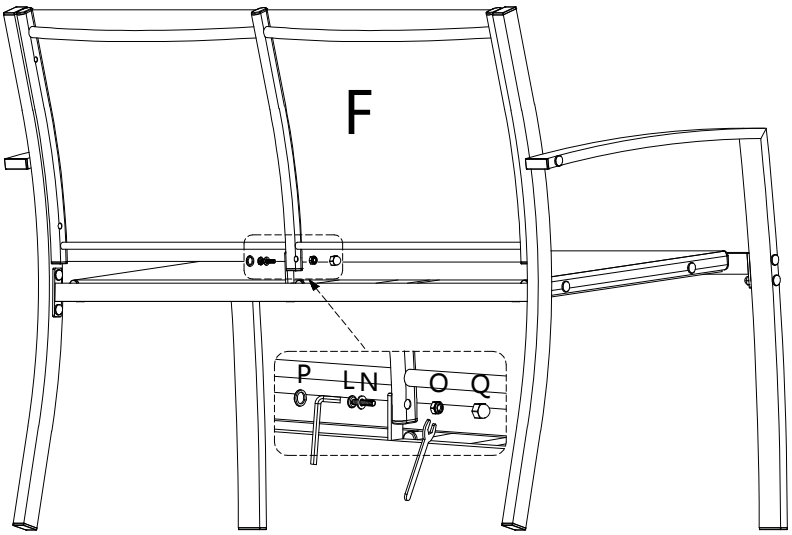

STEP 7

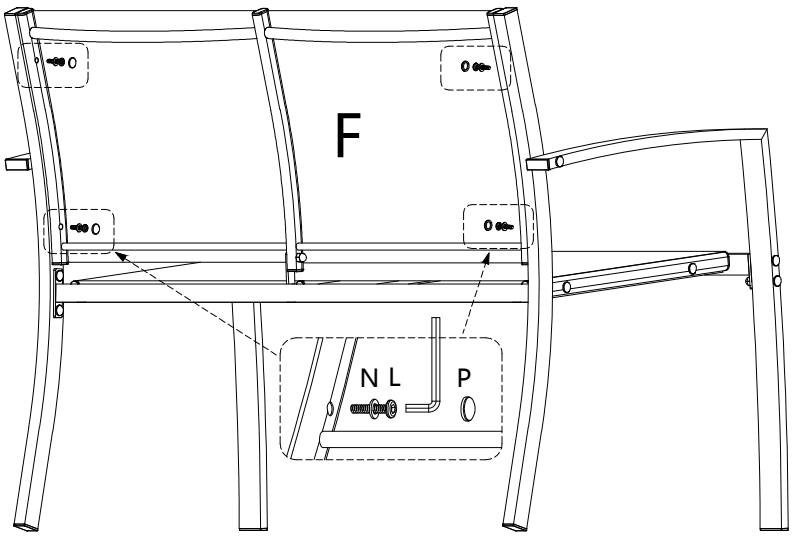

STEP 8

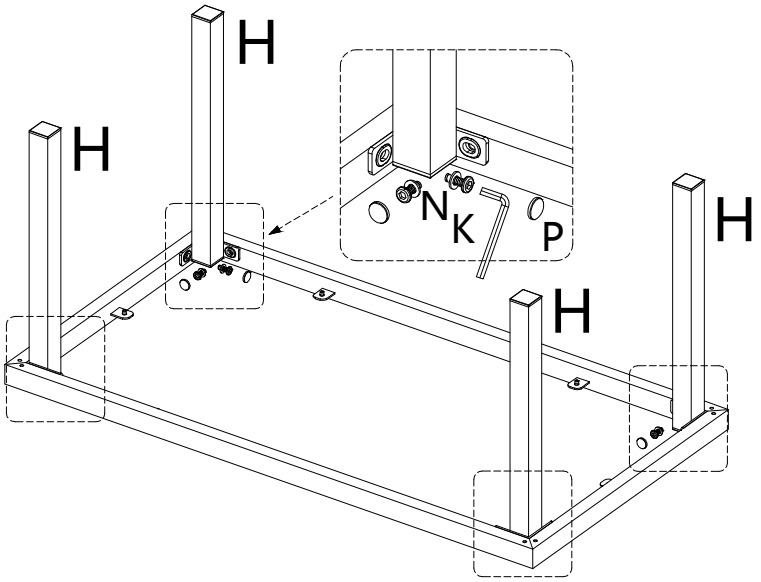

STEP 9

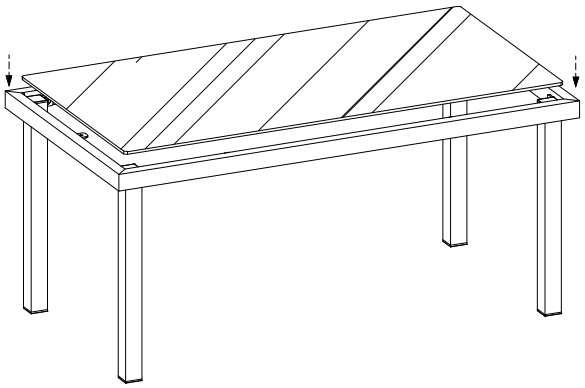

Recommended Maximum Weight

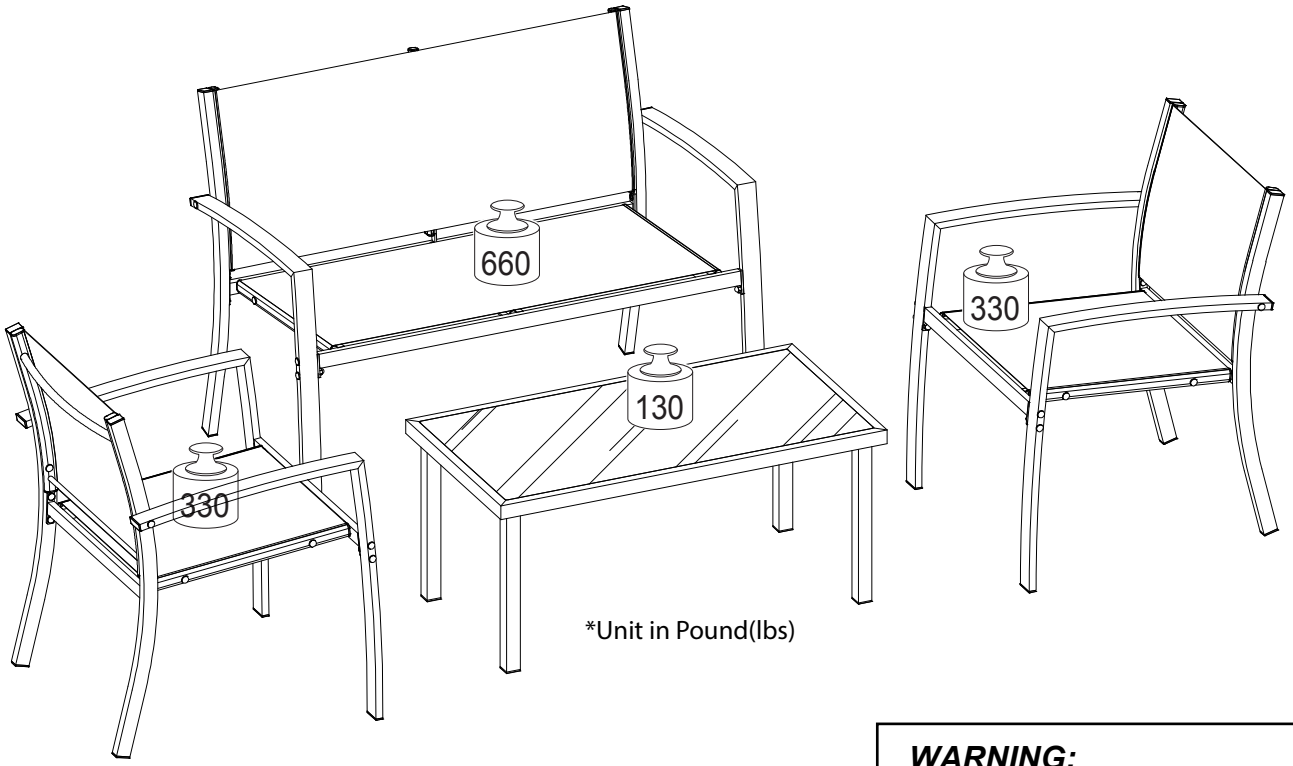

*Unit in Pound(lbs)

WARNING:

>This unit has been designed to support the maximum loads shown. Exceeding these load limits could cause sagging, instability, product collapse, and/or serious injury.

>DO NOT allow children to climb on unit.