FG183005

Furinno Outdoor Patio Furniture Set

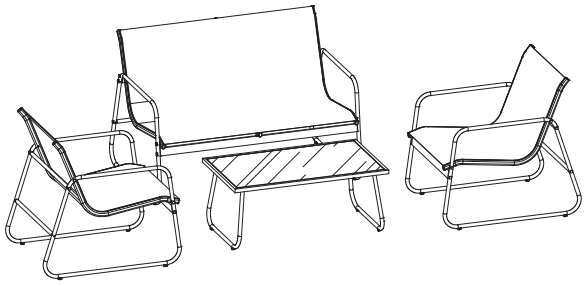

www.furinno.com

NEED HELP? For replacement requests or product inquiries, please contact our Customer Service Team by emailing us at **support@furinno.com**. Thank you for selecting Furinno!

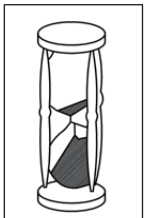

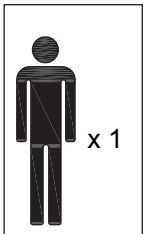

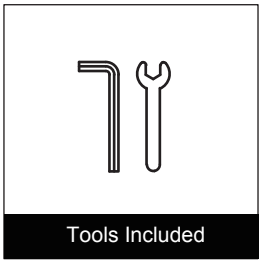

USEFUL HINTS BEFORE YOU START:

1. Read each step carefully before starting.
2. It is important that each step is performed in correct order to avoid difficulties.
3. Identify, sort and count the parts before assembly.
4. Assemble your furniture on packaging cardboard to prevent scratch or damage.
5. Clean the product with mild cleanser using soft damped cloth. Do not use harsh or abrasive cleanser.
6. Using uncompatible hardware might cause damage to product.
7. The plastic covers on some metal parts are just for protection, please remove before assembly.

HARDWARE & PARTS LIST

AL x3	AR x3	B1 x2	B2 x1	C1 x2	C2 x1
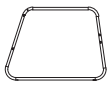	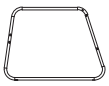		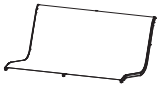		

D1 x2	D2 x2	E1 x4	E2 x1	F x12	G x1
			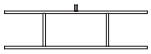		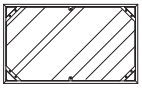

H x2	J x2	K x8	L x2	M x6
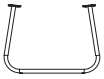				
	Tool	M6x25mm	M6x30mm	M6x35mm

N x12	O x12	P x16	Q x54	R x22	S x40	T x22
						
M6x45mm	M6x60mm	Furnit(M6)	Washer(M6)	Screw(M6)	Plastic End Cap	

REMINDER: Please do not tighten the screws until all of them are in right positions.

STEP 1

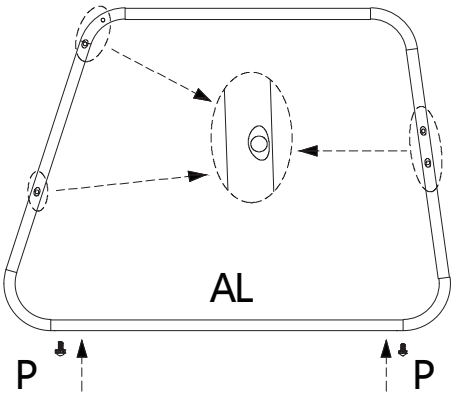

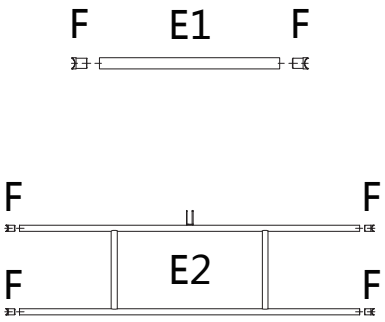

STEP 2

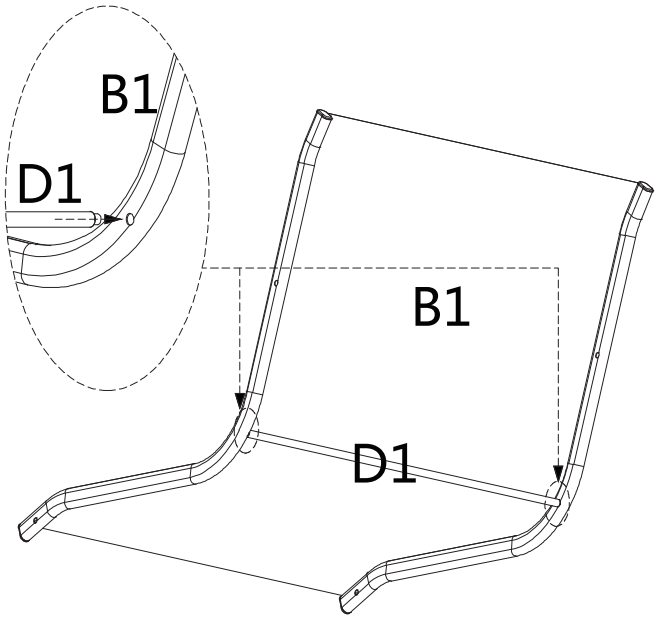

STEP 3

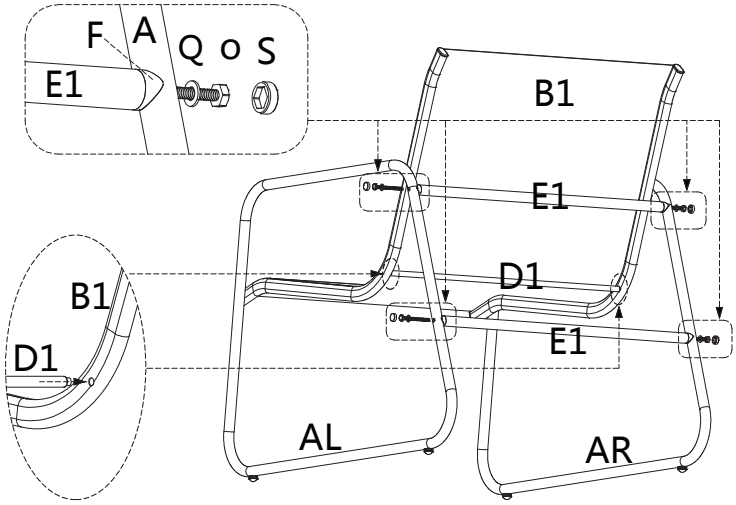

STEP 4

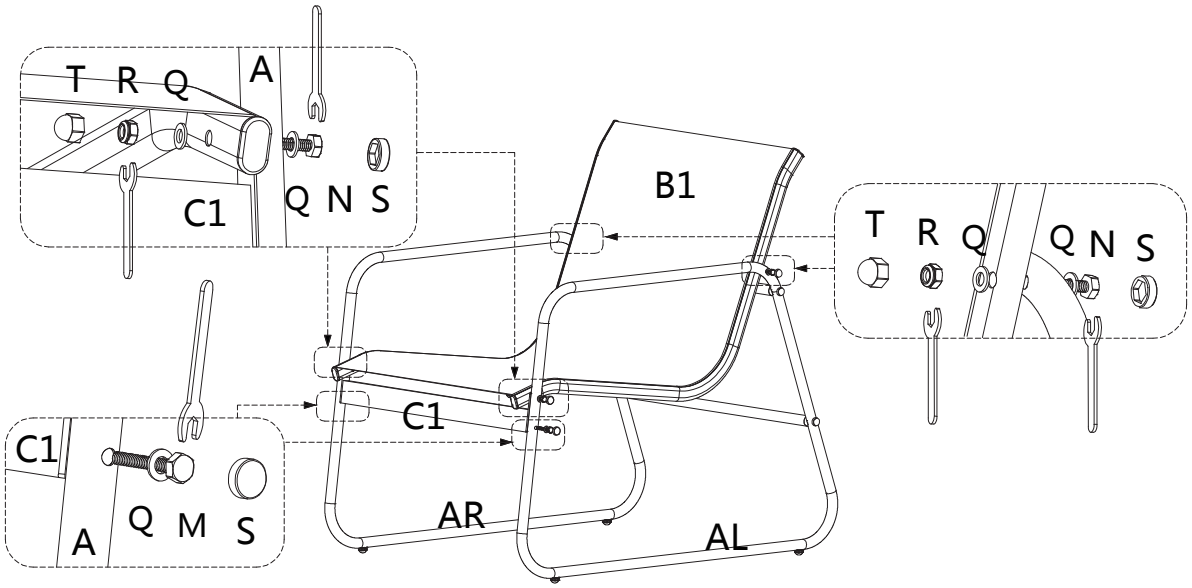

STEP 5

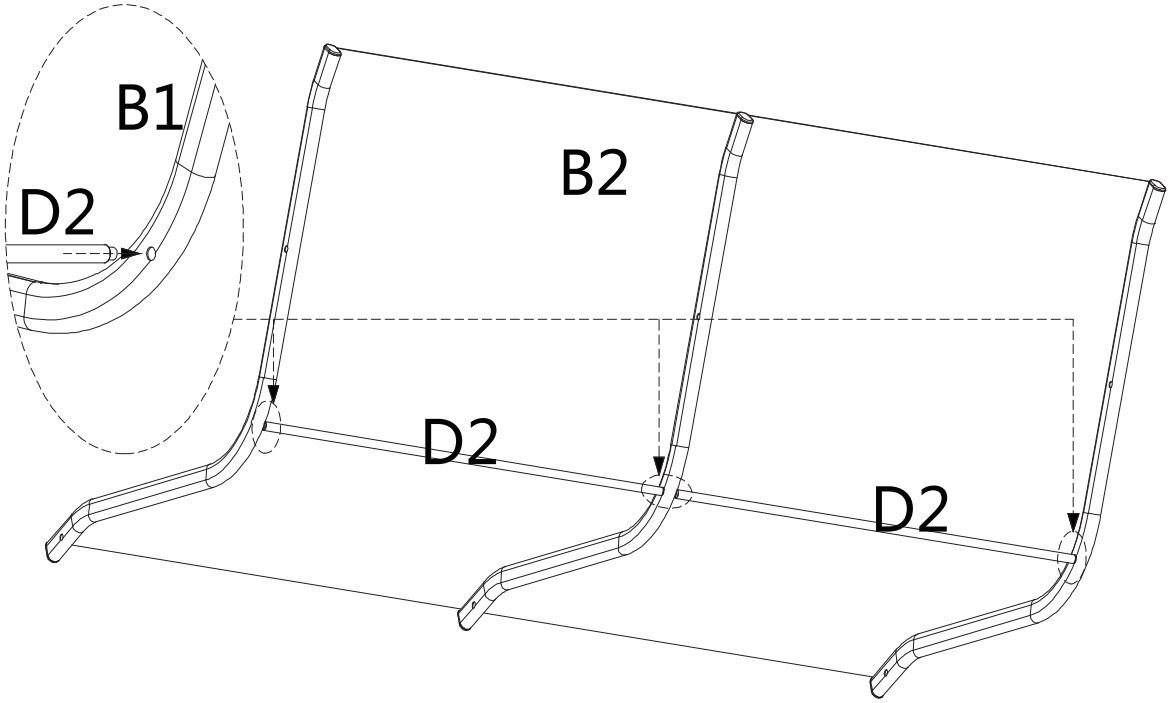

STEP 6

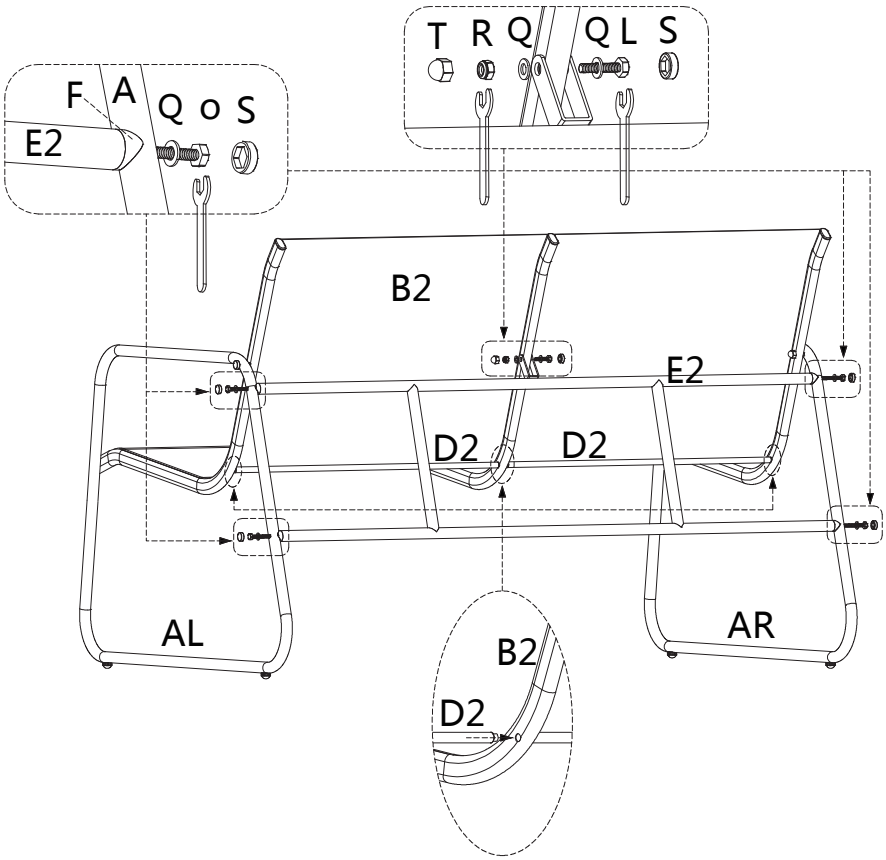
T R Q
Q L S
F A
Q o S
E2
B2
E2
D2
D2
AL
AR
B2
D2

STEP 7

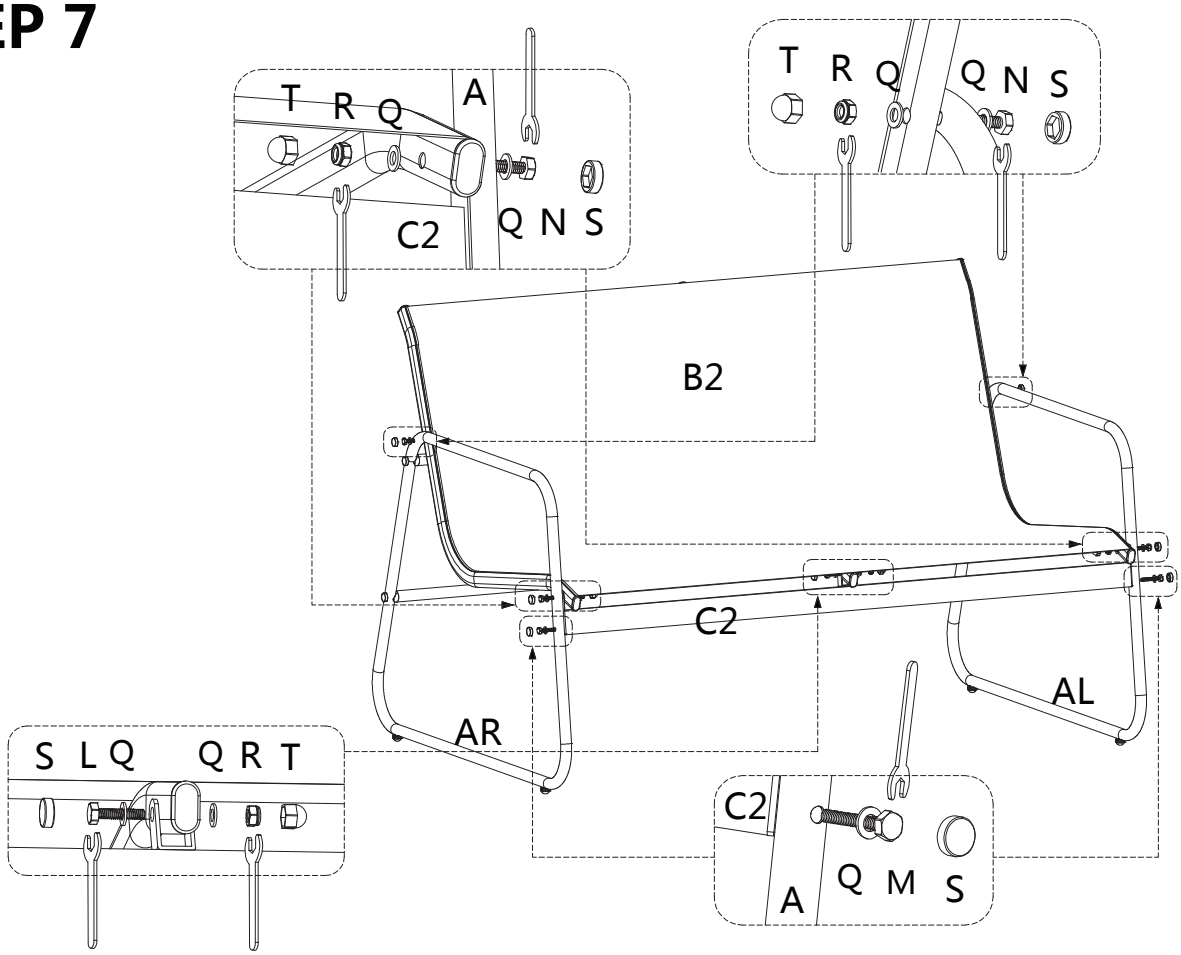
T R Q
A
C2
Q N S
T R Q
Q N S
B2
C2
AL
AR
S L Q
Q R T
C2
A
Q M S

STEP 8

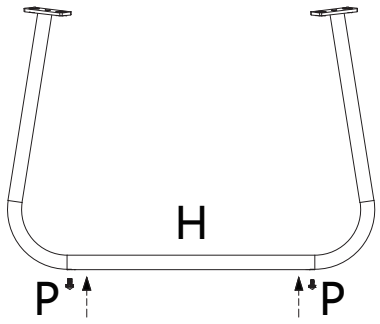

STEP 9

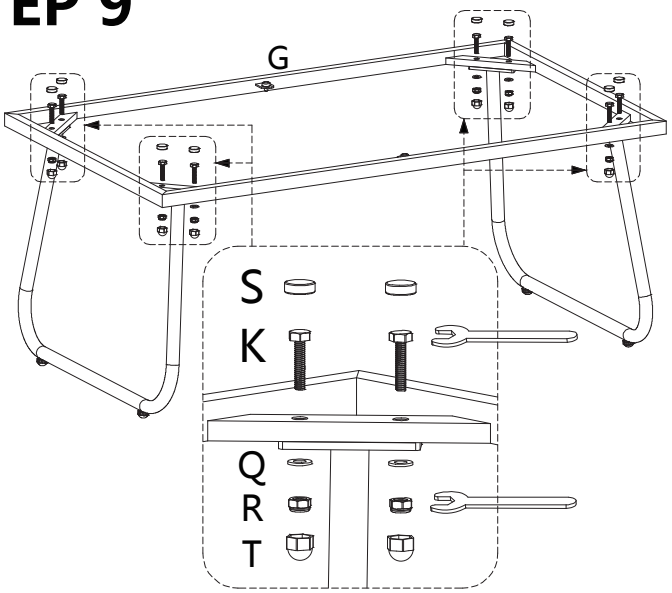

STEP 10

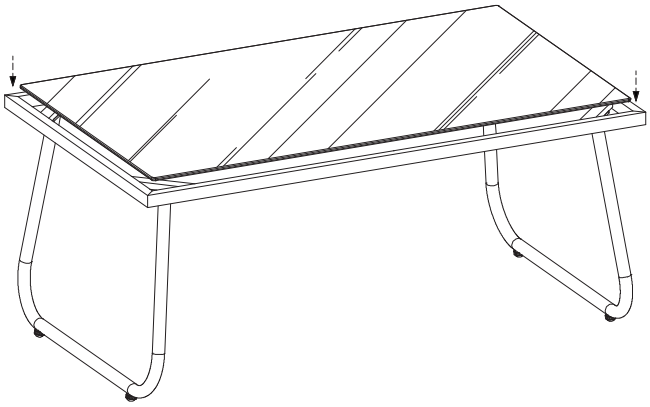

Recommended Maximum Weight

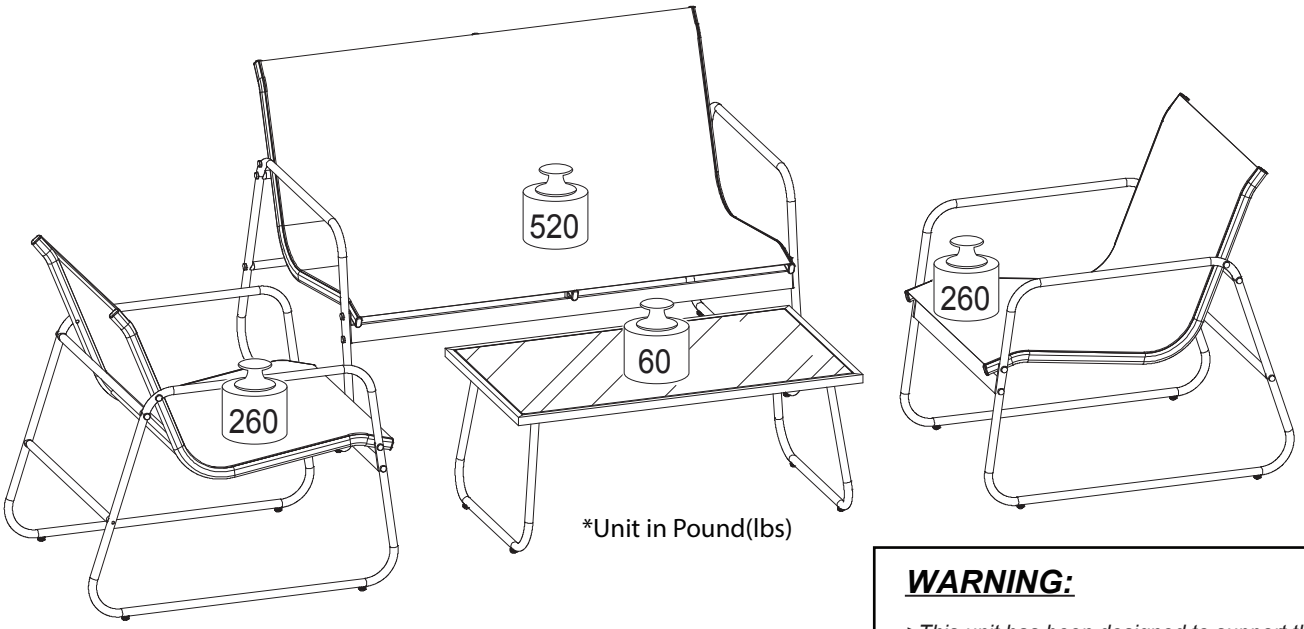

*Unit in Pound(lbs)

WARNING:

>This unit has been designed to support the maximum loads shown. Exceeding these load limits could cause sagging, instability, product collapse, and/or serious injury.

>DO NOT allow children to climb on unit.