FG18415S

Furinno 3 Seater Swing with Stand



Fits Space. Fits Budget

www.furinno.com

NEED HELP? For replacement requests or product inquiries, please contact our Customer Service Team by emailing us at **support@furinno.com**. Thank you for selecting Furinno!



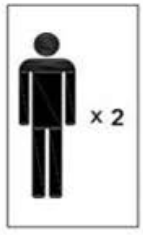



CARE INSTRUCTION:

This Furniture was treated with teak oil at the factory. To maintain the original appearance, you need to treat with a suitable wood oil at least once a year. Left untreated, the wood will weather to a silvery grey.

As timber is a living product you may find that you need to periodically tighten any fittings.

Covering or stroring your furniture to protect it from ice and snow will keep it looking even better for even longer!

PART 1 : A-STAND ASSEMBLY

Parts List:



A Back Leg (L & R) - 2 pcs

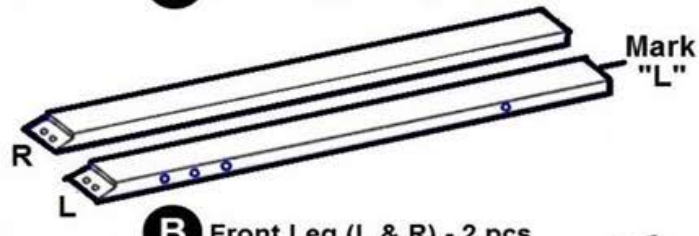

B Front Leg (L & R) - 2 pcs

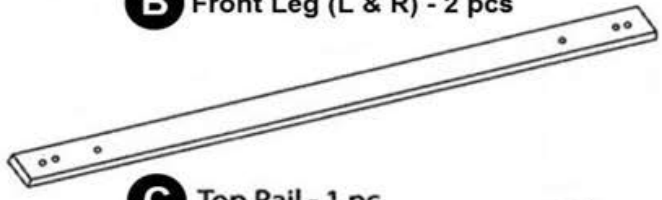

C Top Rail - 1 pc

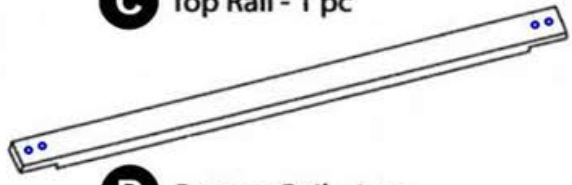

D Bottom Rail - 1 pc



E Side Rail - 2 pcs



F Support Bar - 2 pcs

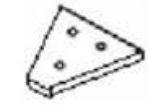

G Top Bar - 2 pcs

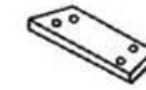

H Top Bar - 2 pcs

Hardware List

(I) JCBC M6 x 60  x 4	(K) JCBC M6 x 45 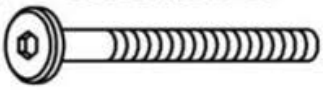 x 20	(M)  Washer x 8
(J) JCBC M6 x 50  x 4	(L) Lock Nut M6 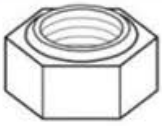 x 8	(N) M10 Spanner 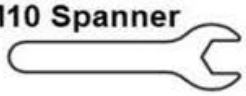 x 1
		(O) JCBCW M7 X 40  x 2

Step 1

Attach Top Rail (C) to Front & Back Leg (A) & (B).

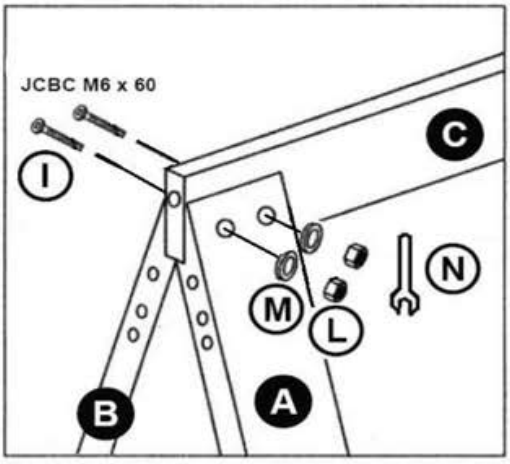

Step 2

Attach Side Rail (E) as shown.

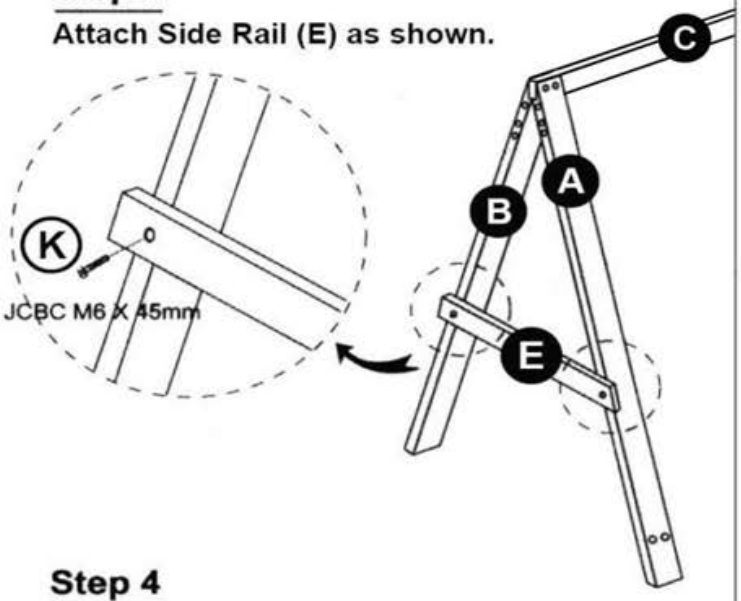

Step 3

3.1 Repeat Step 1 & 2 to another side.

3.2 Attach Bottom Rail (D) to assembled unit as shown.

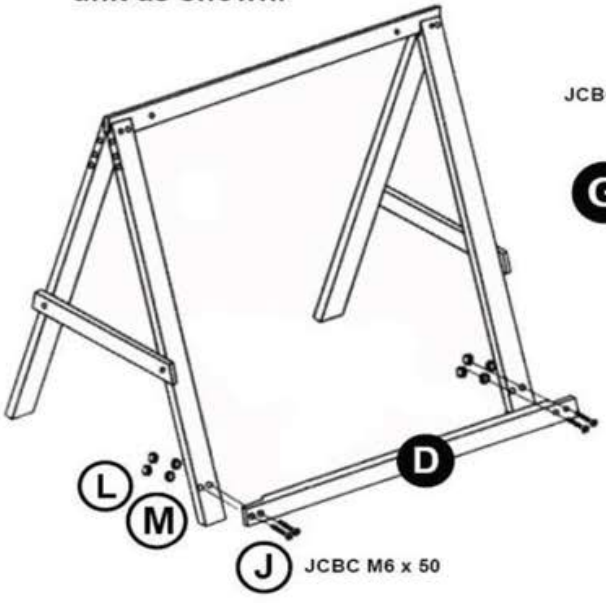

Step 4

Attach Top Bar (G) & (H) as shown.

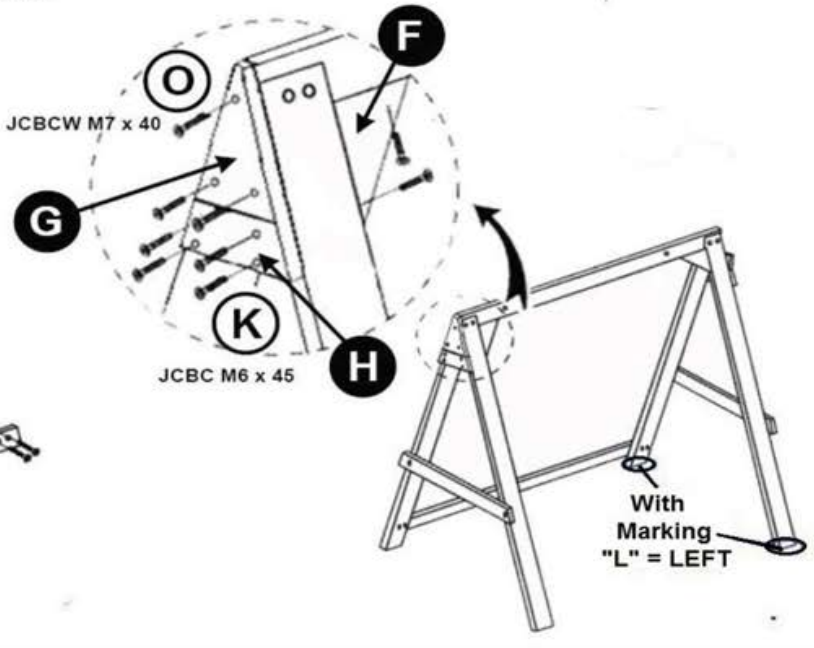

REMINDER: Please do not tighten any screw until all of them are in right positions.

PART 2 : BENCH ASSEMBLY

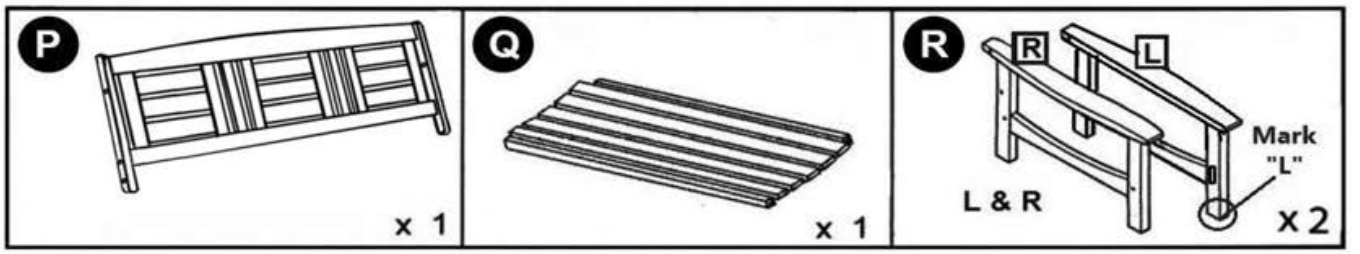

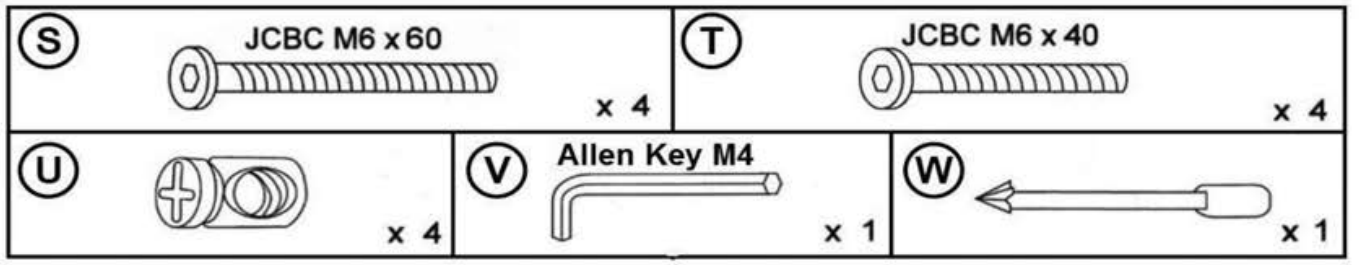

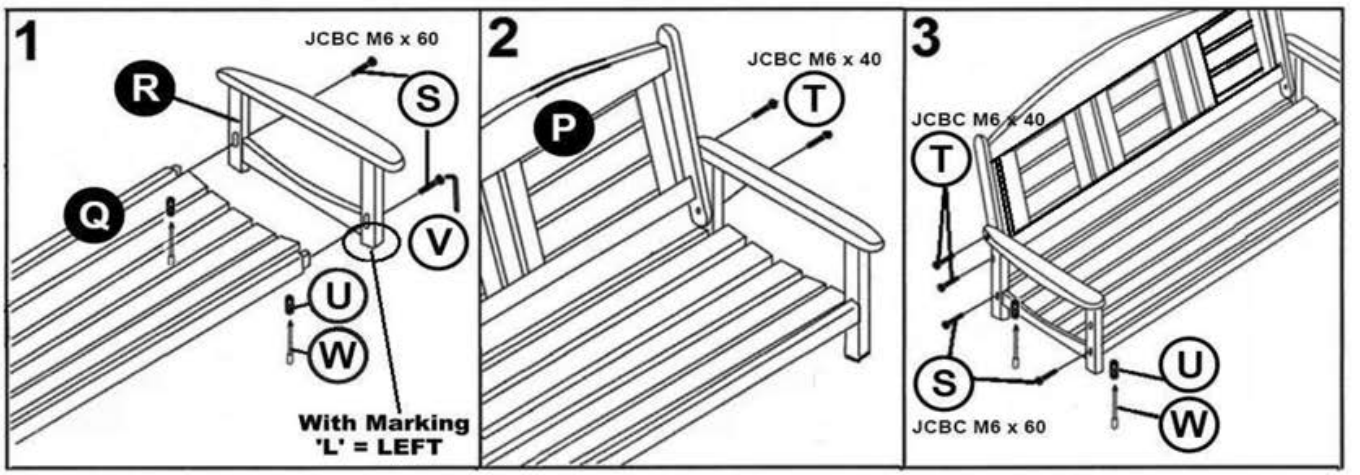

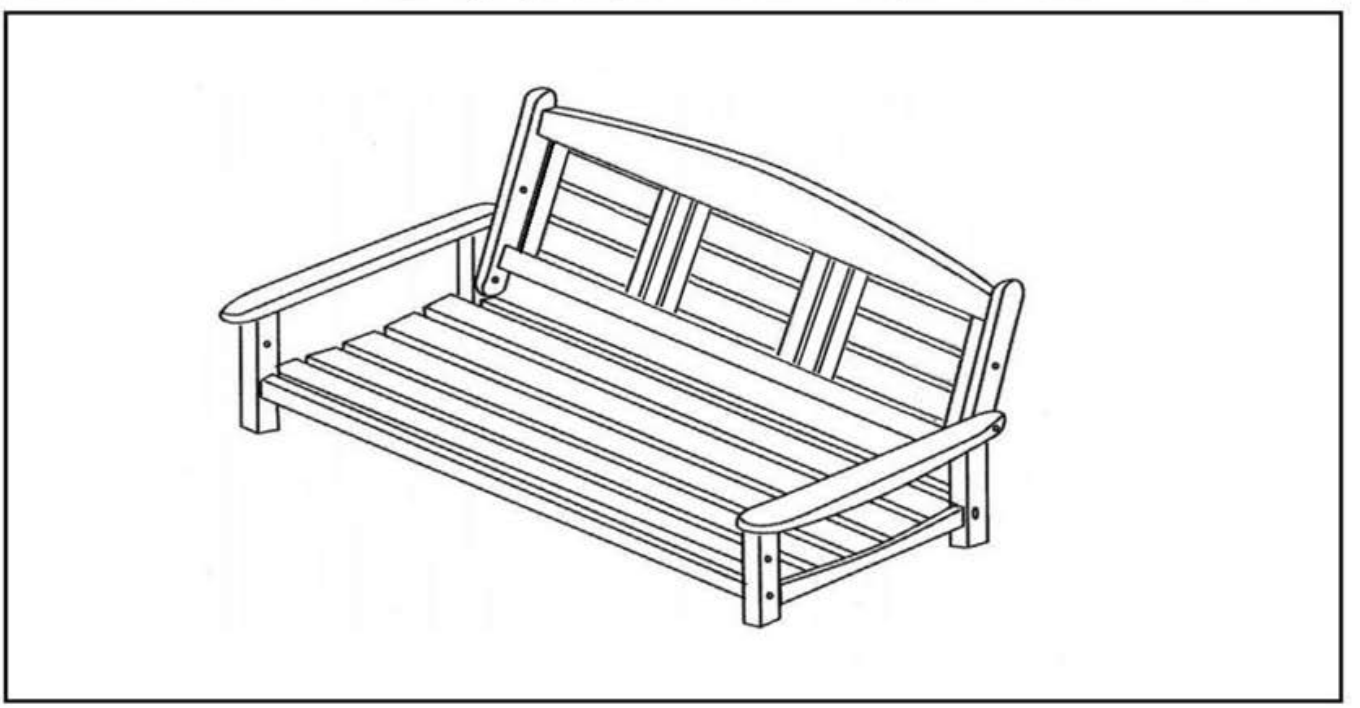

REMINDER: Please do not tighten any screw until all of them are in right positions.

PART 3 : SWING ASSEMBLY

HARDWARE	
1. Hex Head M12 x 60	- 2 pcs
2. Hex Nut M12	- 2 pcs
3. U Hook	- 2 pcs
4. Chain : Short	- 2 pcs
: Long	- 2 pcs
5. Hex Nut M8	- 4 pcs

HARDWARE	
6. Allen Key M5	- 1 pcs
7. M19 Spanner	- 1 pc
8. M13 Spanner	- 1 pc
9. Nylon Washer	- 4 pcs
10. JCBB M8x50mm	- 4 pcs
11. Flat Washer (M8x22x12)	- 8 pcs

Step 1
Screw in Chain to Seat Deck

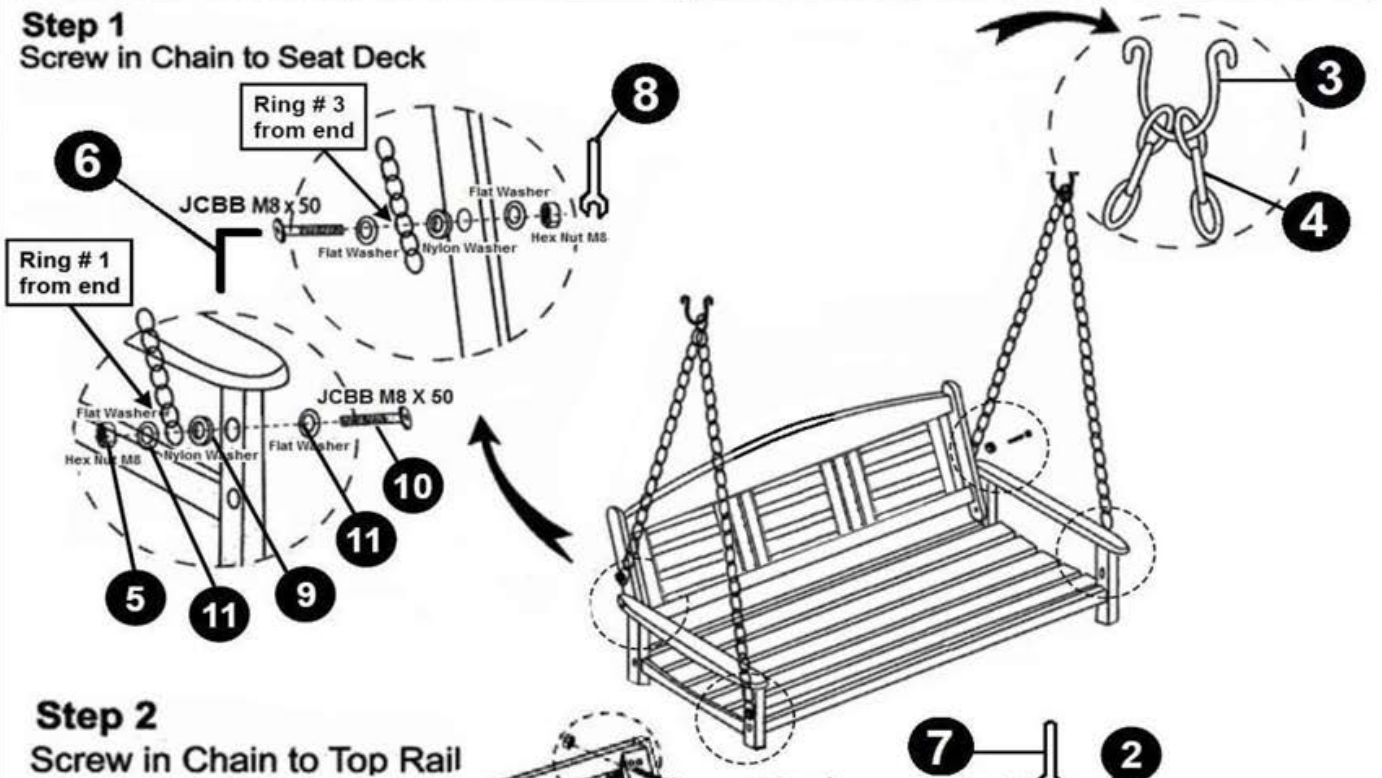

Step 2
Screw in Chain to Top Rail

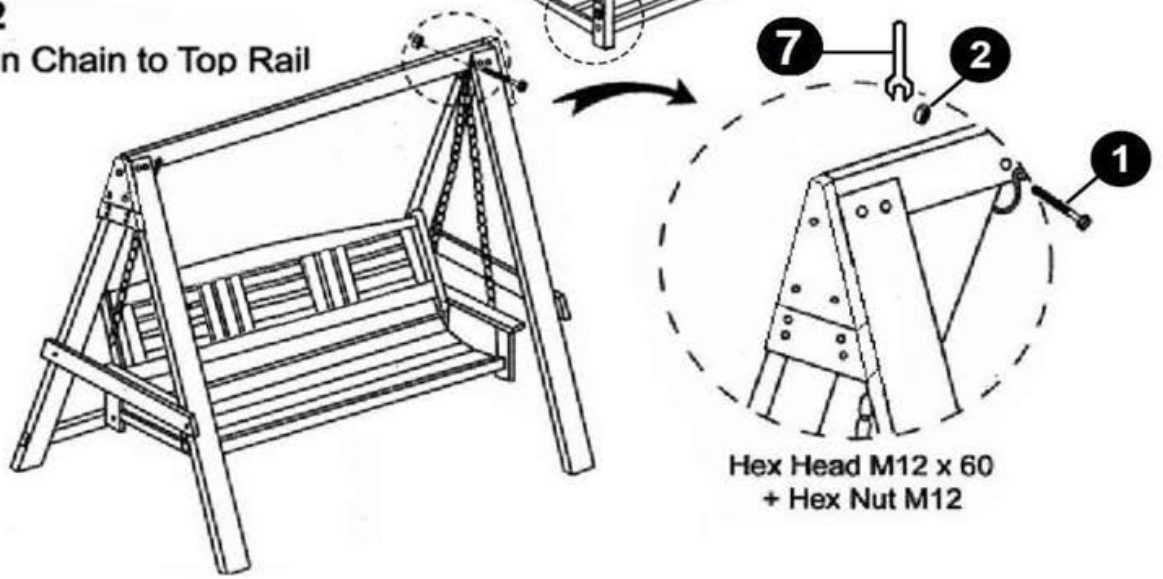

REMINDER: Please do not tighten any screw until all of them are in right positions.