FG18445

Furinno 3-Tier Corner Shelf

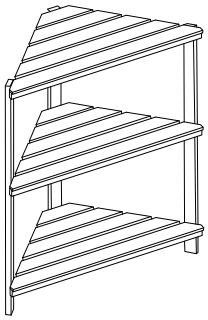

www.furinno.com

NEED HELP? For replacement requests or product inquiries, please contact our Customer Service Team by emailing us at **support@furinno.com**. Thank you for selecting Furinno!

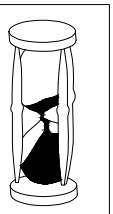

10 min

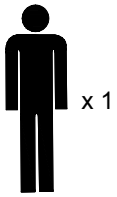

x 1

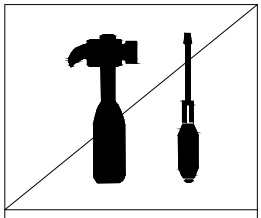

No Tools Required

CARE INSTRUCTION:

This Furniture was treated with teak oil at the factory. To maintain the original appearance, you need to treat with a suitable wood oil at least once a year. Left untreated, the wood will weather to a silvery grey.

As timber is a living product you may find that you need to periodically tighten any fittings.

Covering or stroring your furniture to protect it from ice and snow will keep it looking even better for even longer!

A

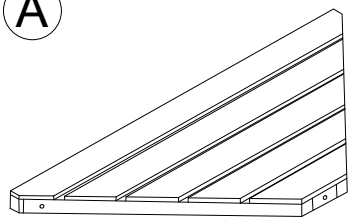

X 3

B

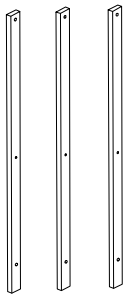

X 3

C

JCBC 40mm

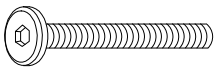

X 9

D

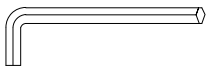

X 1

1

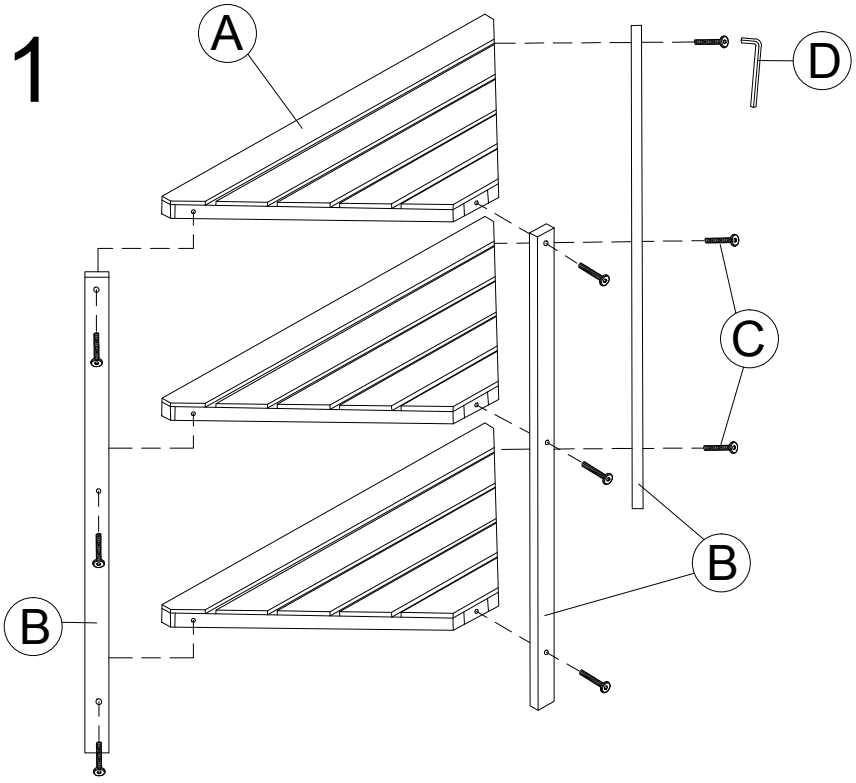

2

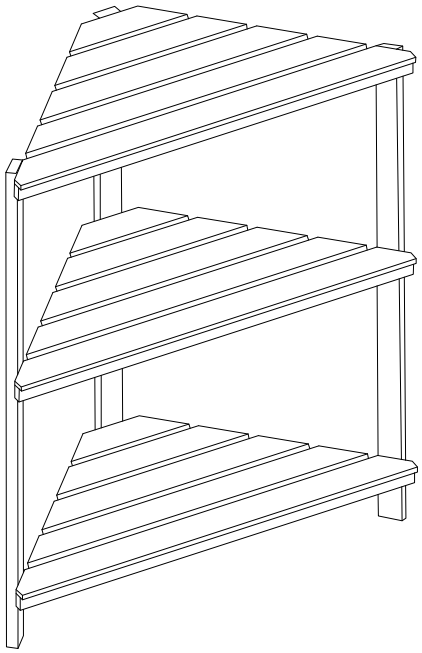

*** Do Not Tighten Any Bolt Until All Bolt Have Been Placed.**