STEP 4

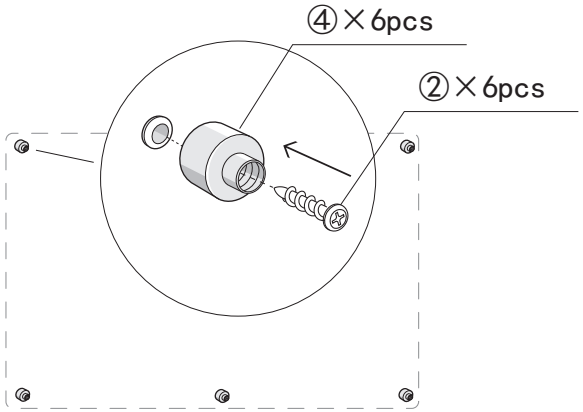

STEP 5

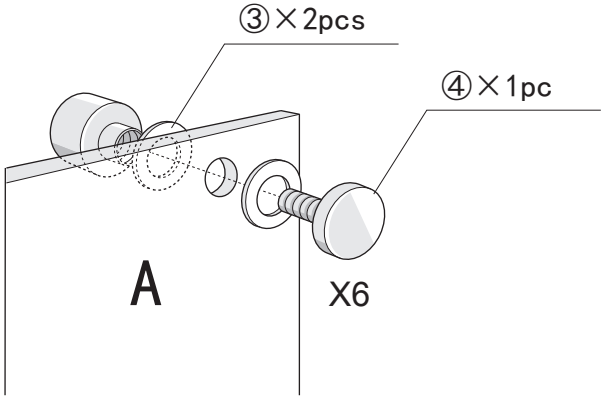

STEP 6

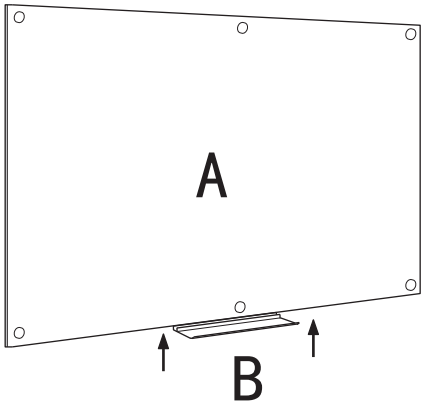

Furinno®
Fits Space. Fits Budget

Assembly Instruction

Furinno Glass Board
MODEL : **FGB3959 / FGB3672**

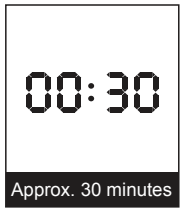





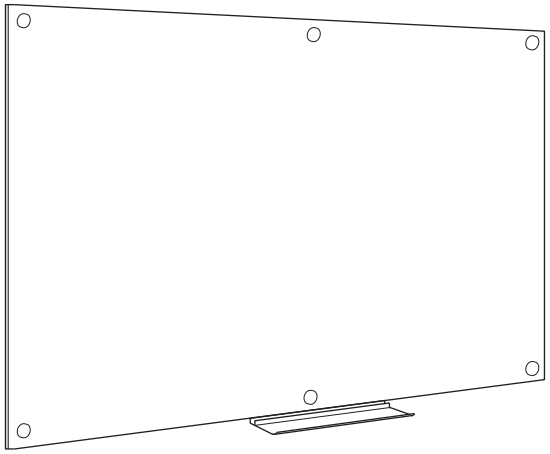

Customer Support

NEED HELP? For replacement requests or product inquiries, please contact our Customer Service Team by emailing us at **support@furinno.com**. Thank you for selecting Furinno!

www.furinno.com

FGB3959 / FGB367220181114

No	Hardware List	Qty
①	Expansion Plug	6pcs
②	Screw	6pcs
③	Gasket	12pcs
④	Nail	6pcs

No	Parts List	Qty
A	Glass Board	1pc
B	Pen Holder	1pc

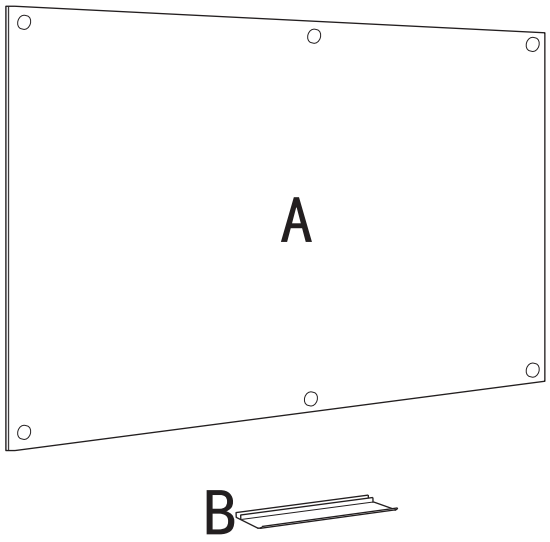

USEFUL HINTS BEFORE YOU START:

1. Read each step carefully before starting.
2. It is important that each step is performed in correct order to avoid difficulties.
3. Identify, sort and count the parts before assembly.
4. Assemble your furniture on packaging cardboard to prevent scratch or damage.
5. Clean the product with mild cleanser using soft damped cloth. Do not use harsh or abrasive cleanser.
6. Using uncompatible hardware might cause damage to product.

STEP 1

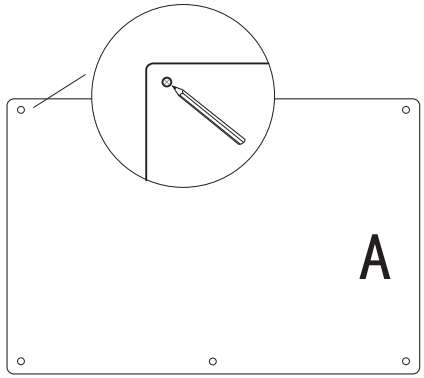

STEP 2

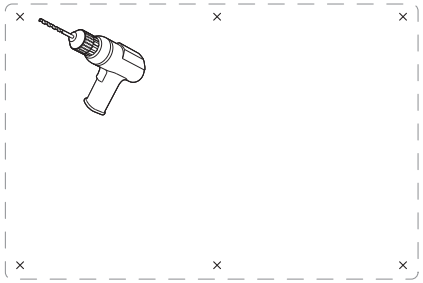

STEP 3

