## STEP 4

| | | |
|---|---|---|
| 3 | | 10 pcs |

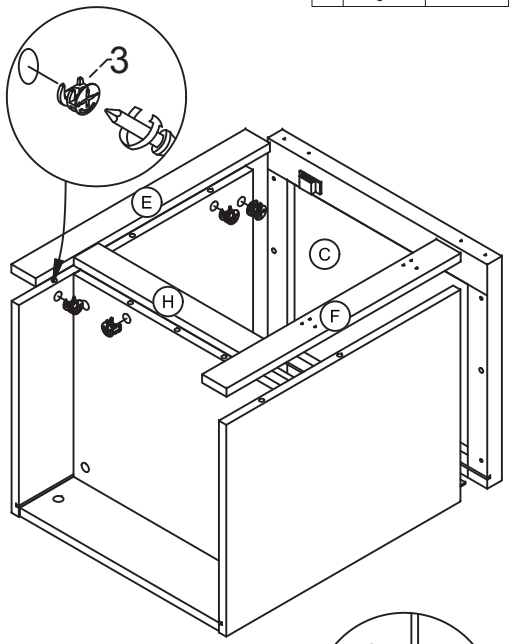


## STEP 5

| | | |
|---|---|---|
| 5 | | 4 pcs |
| 7 | | 4 pcs |
| 12 | | 4 pcs |

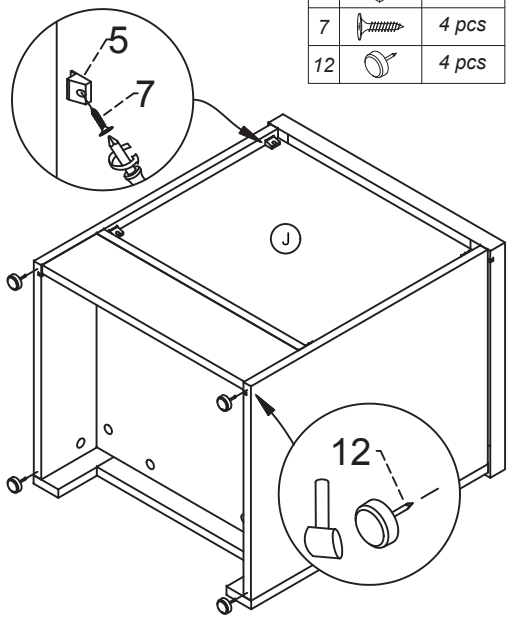


## STEP 6

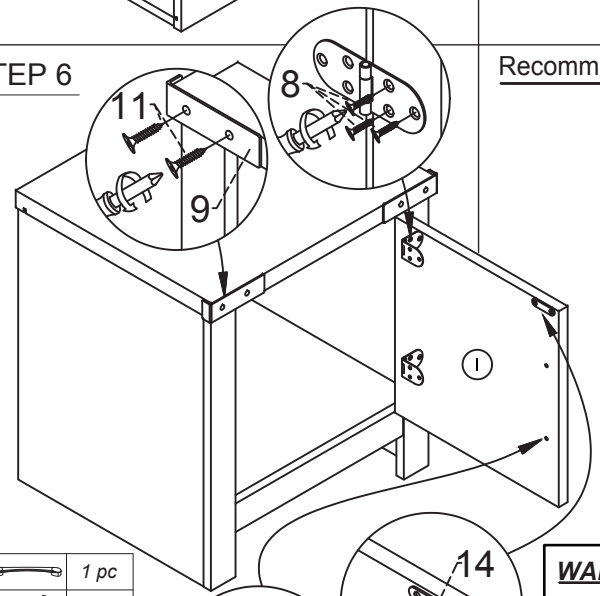


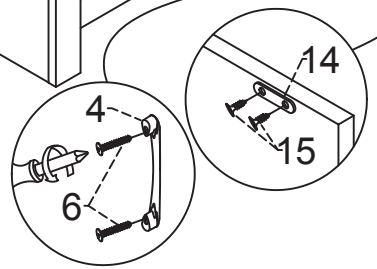





| | | |
|---|---|---|
| 4 | | 1 pc |
| 6 | | 2 pcs |
| 8 | | 6 pcs |
| 9 | | 2 pcs |
| 11 | | 4 pcs |
| 14 | | 1 pc |
| 15 | | 2 pcs |

## Recommended Maximum Weight

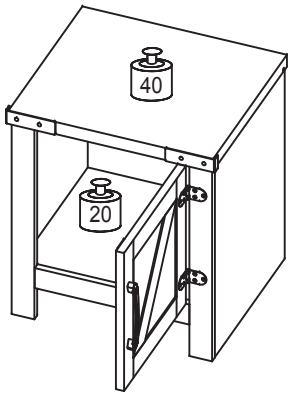


*Unit in Pound（lbs)

***WARNING:***

*>This unit has been designed to support the maximum loads shown. Exceeding these load limits could cause sagging, instability, product collapse, and/or serious injury.*

*>DO NOT allow children to climb on unit.*

*>Put heavier items on lower shelves.*



Furinno®

*Fits Space, Fits Budget*

# *Assembly Instruction*

Furinno Farmhouse End Table

MODEL : FH22002










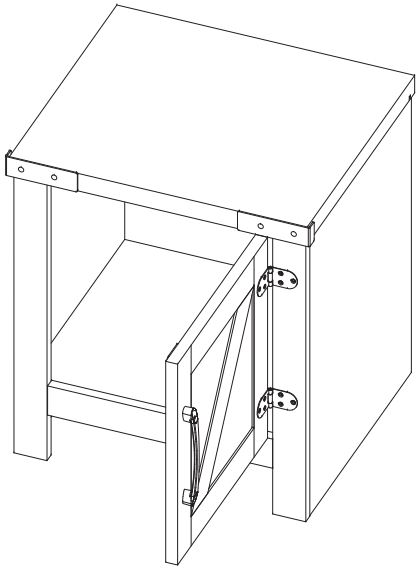

## *Customer Support*

NEED HELP? For replacement requests or product inquiries, please contact our Customer Service Team by emailing us at support@furinno.com. Thank you for selecting Furinno!

***www.furinno.com***



FH2200220220518

| No | Hardware List | Qty |
|---|---|---|
| 1 | Dowel ⌀8x30mm | 11pcs |
| 2 | Minifix Bolt | 16pcs |
| 3 | Minifix Cam | 16pcs |
| 4 | Handle 128mm | 1pc |
| 5 | 192 Stub | 4pcs |
| 6 | Handle Screw ⌀4x22mm | 2pcs |
| 7 | Screw ⌀3.1x20mm | 4pcs |
| 8 | Rattan Screw ⌀8x16mm | 12pcs |
| 9 | Bracket (107x32x17mm) | 2pcs |
| 10 | Flap Hinge | 2pcs |
| 11 | Rattan Screw ⌀10x16mm | 4pcs |
| 12 | PVC Nail with Pin | 4pcs |
| 13 | Magnet | 1pc |
| 14 | Magnet Plate | 1pc |
| 15 | Screw ⌀3.5x16mm | 2pcs |

| No | Parts List | Qty |
|---|---|---|
| A | Left Side Panel | 1pc |
| B | Right Side Panel | 1pc |
| C | Top Panel | 1pc |
| D | Bottom Panel | 1pc |
| E | Left Bar Panel | 1pc |
| F | Right Bar Panel | 1pc |
| G | Back Bottom Panel | 1pc |
| H | Front Bottom Panel | 1pc |
| I | Door Panel | 1pc |
| J | Back Panel | 1pc |

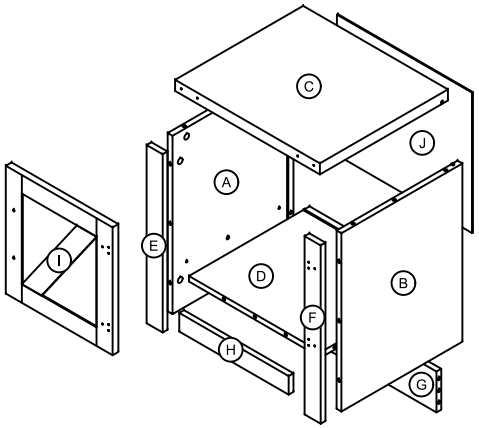


USEFUL HINTS BEFORE YOU START:

1. Read each step carefully before starting.
2. It is important that each step is performed in correct order to avoid difficulties.
3. Identify, sort and count the parts before assembly.
4. Assemble your furniture on packaging cardboard to prevent scratch or damage.
5. Clean the product with mild cleanser using soft damped cloth. Do not use harsh or abrasive cleanser.
6. Using uncompatible hardware might cause damage to product.

DO NOT FULLY TIGHTEN ANY BOLTS BEFORE ALL PARTS ARE LOOSELY ASSEMBLED. THE PRODUCT/ FITTINGS MAY BE DAMAGED IF OVERTIGHTENED. BEWARE OF CROSS THREADING SCREWS AND BOLTS DURINGS ASSEMBLY SMALL COMPONENT PARTS COULD CHOKE A CHILD IF SWALLOWED. WE STRONGLY RECOMMEND THAT YOU KEEP. CHILDREN AWAY FROM THE WORK AREA.



## STEP 1

| | | |
|---|---|---|
| 1 | | 11 pcs |
| 2 | | 16 pcs |
| 13 | | 1 pc |

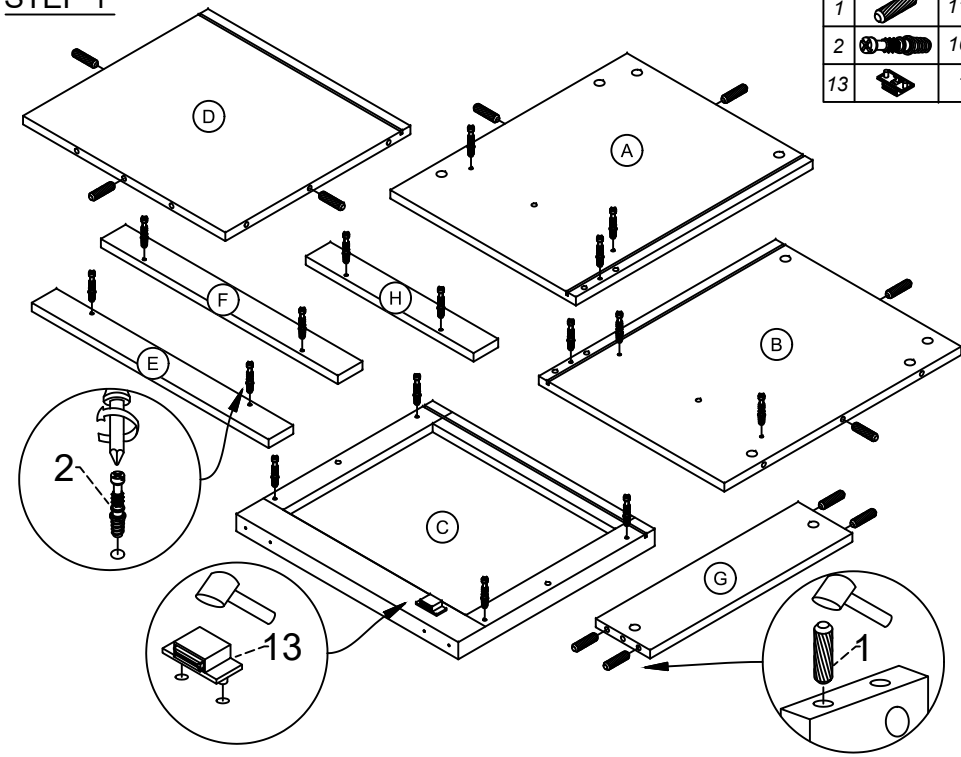


## STEP 2

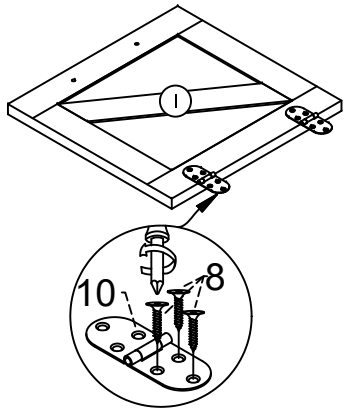


| | | |
|---|---|---|
| 8 | | 6 pcs |
| 10 | | 2 pcs |

## STEP 3

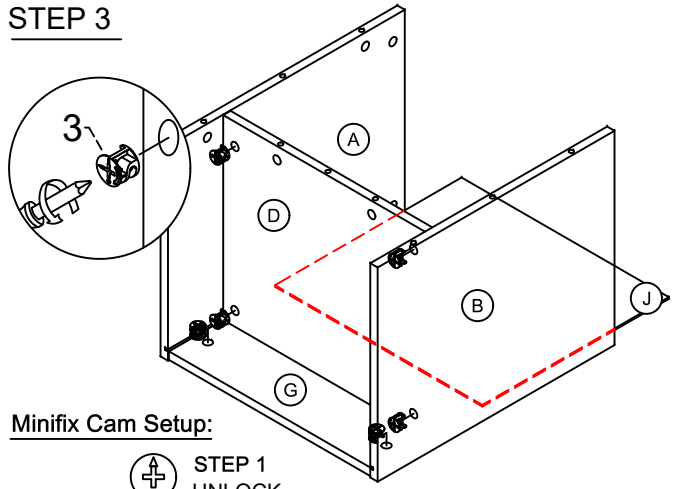


Minifix Cam Setup:

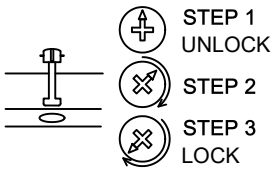


| | | |
|---|---|---|
| 3 | | 6 pcs |