Furinno®
Fits Space, Fits Budget

00:30
Approx. 30 min

Recomm. 1 Person

Tools Required

Assembly Instruction

Furinno Farmhouse Pet House

MODEL : FH22302

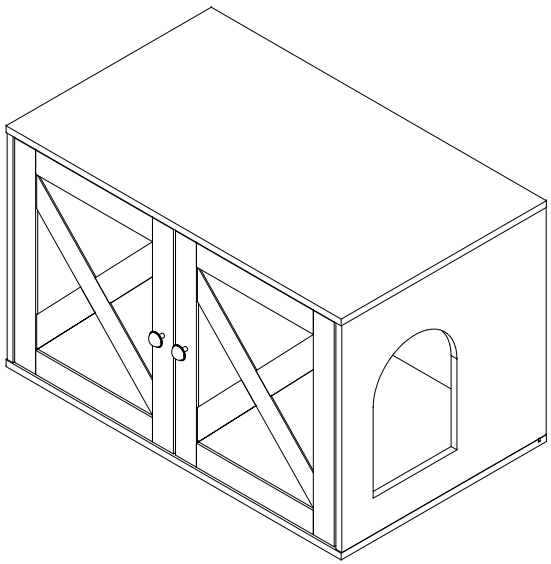

No	Part List		Qty
1		Wood Dowel ⌀8x30mm	14 pcs
2		Minifix Bolt	8 pcs
3		Minifix Cam	8 pcs
4		PVC Nail With Pin	5 pcs
5		Magnet	2 pcs
6		Screw ⌀3.5x14mm	16 pcs
7		Unitar Screw ⌀6.3x40mm	5 pcs
8		Handle	2 pcs
9	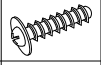	Handle Screw ⌀4x19mm	2 pcs
10		192 Stub	4 pcs
11		Screw ⌀3.1x20mm	4 pcs
12		MT Door Stopper	4 pcs
13	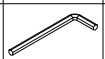	Allen Key M4	1 pc
14		PVC Stopper	1 pc
15		Magnet Plate	2 pcs

No	Part List	Qty
A	Left Side Panel	1 pc
B	Right Side Panel	1 pc
C	Top Panel	1 pc
D	Bottom Panel	1 pc
E	Back Support Panel	1 pc
F	Middle Panel	1 pc
G	Back Panel	1 pc
H	Left Door Panel	1 pc
I	Right Door Panel	1 pc

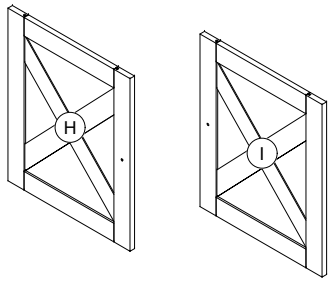

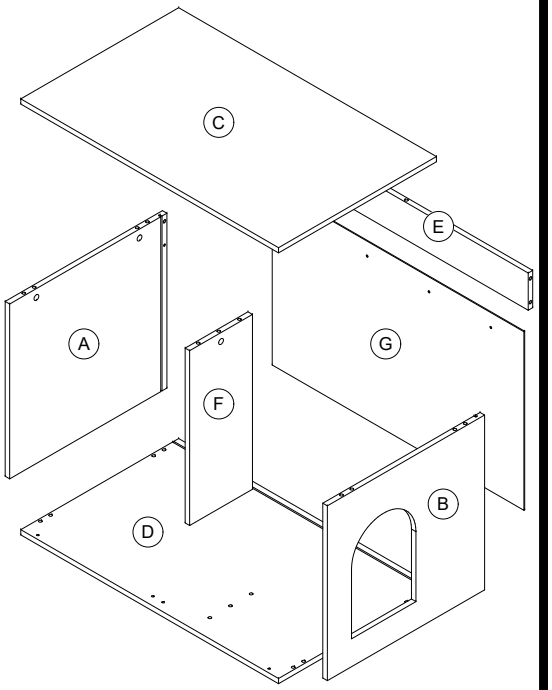

Customer Support

NEED HELP? For replacement requests or product inquiries, please contact our Customer Service Team by emailing us at support@furinno.com. Thank you for selecting Furinno!

www.furinno.com

DO NOT FULLY TIGHTEN ANY BOLTS BEFORE ALL PARTS ARE LOOSELY ASSEMBLED. THE PRODUCT/ FITTINGS MAY BE DAMAGED IF OVERTIGHTENED. BEWARE OF CROSS THREADING SCREWS AND BOLTS DURINGS ASSEMBLY SMALL COMPONENT PARTS COULD CHOKE A CHILD IF SWALLOWED. WE STRONGLY RECOMMEND THAT YOU KEEP. CHILDREN AWAY FROM THE WORK AREA.

STEP 1

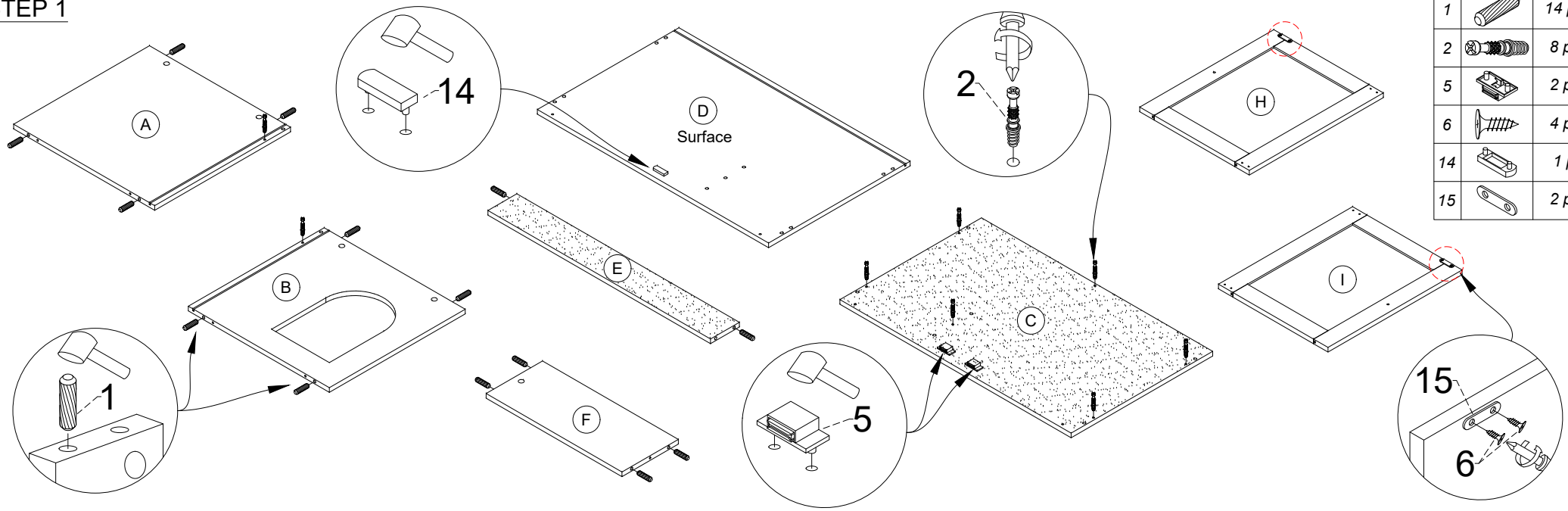

1		14 pcs
2		8 pcs
5		2 pcs
6		4 pcs
14		1 pc
15		2 pcs

STEP 2

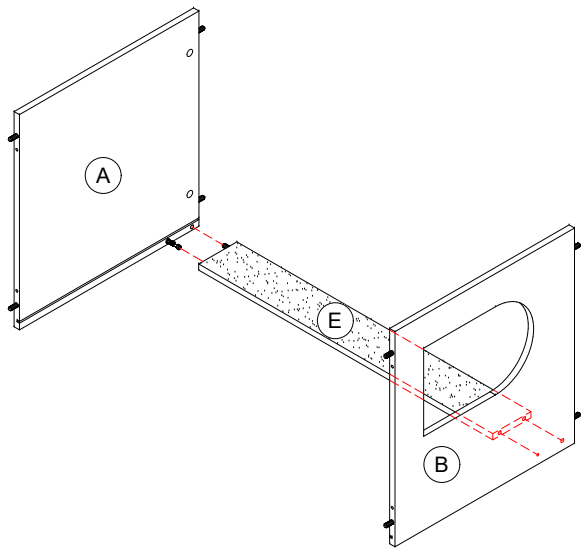

STEP 3

7		4 pcs
13		1 pc

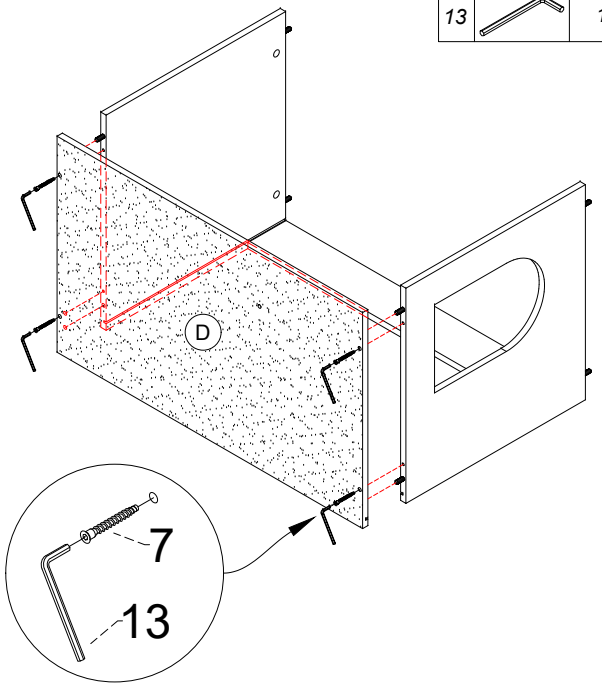

STEP 4

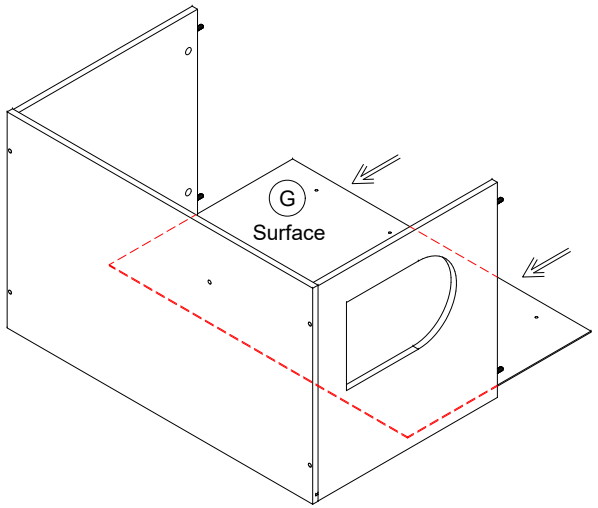

STEP 5

6		4 pcs

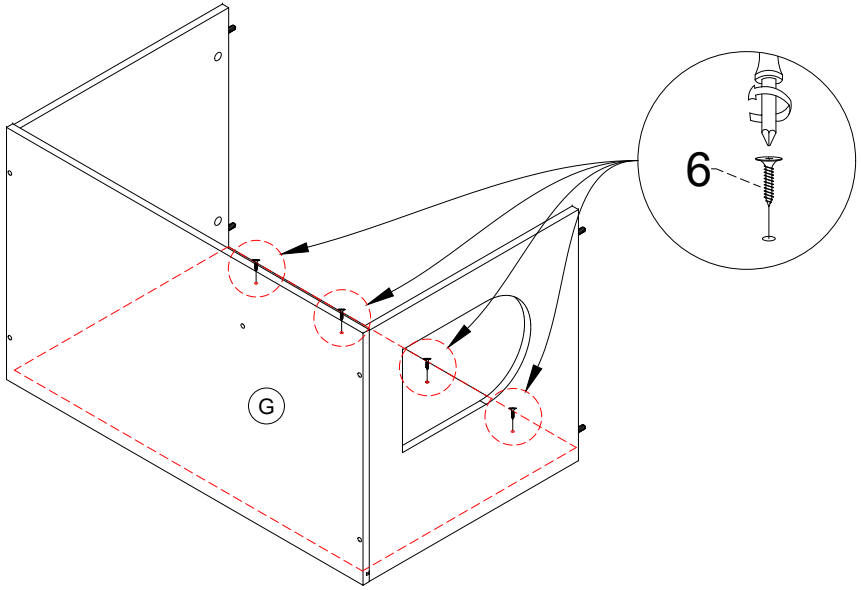

STEP 6

7		1 pc
13	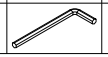	1 pc

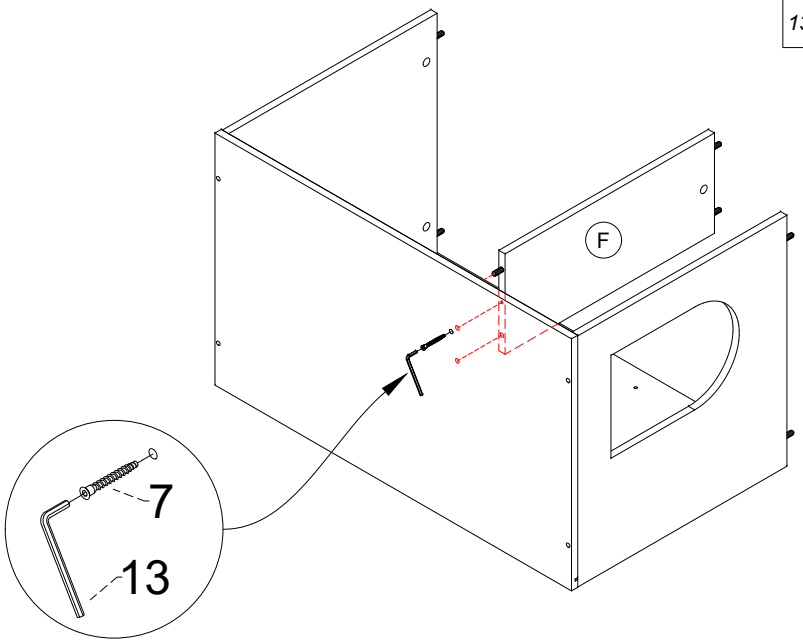

STEP 7

3		5 pcs

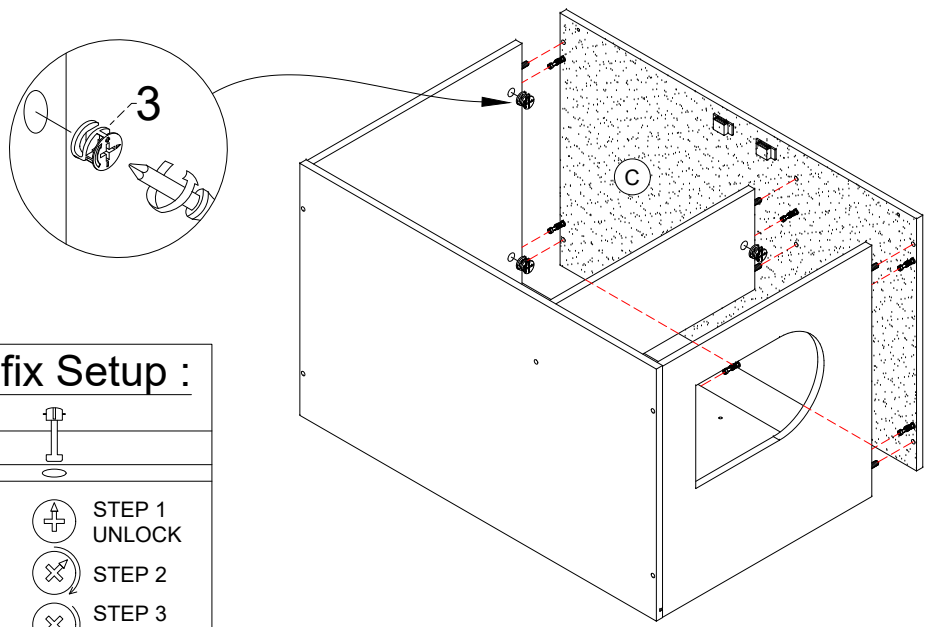

Minifix Setup :

STEP 8

3		3 pcs
4		5 pcs
10		4 pcs
11		4 pcs

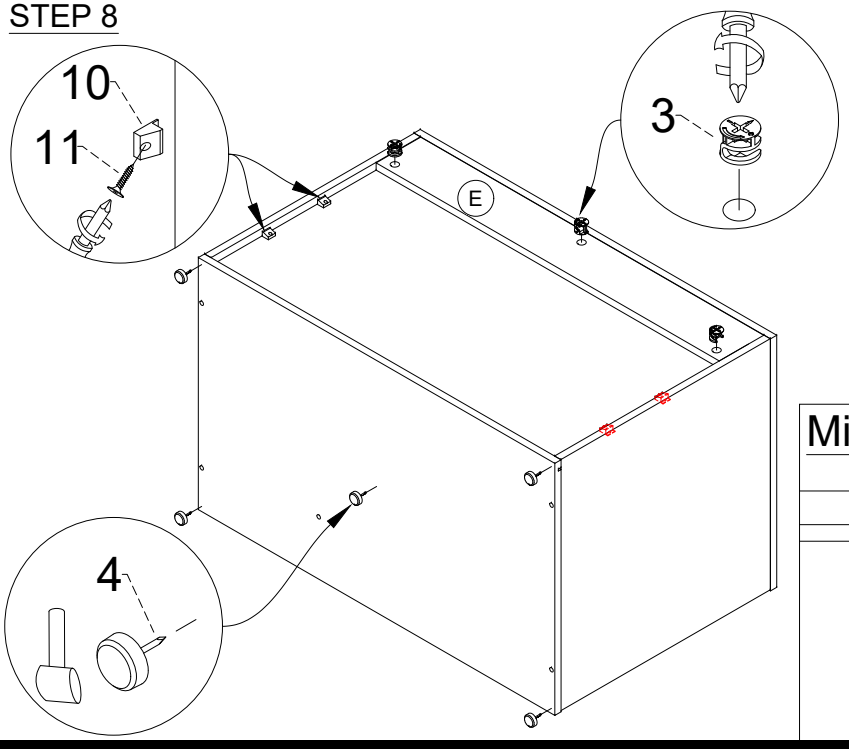

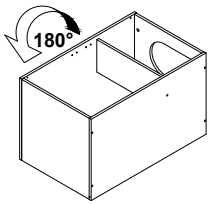

Minifix Setup :

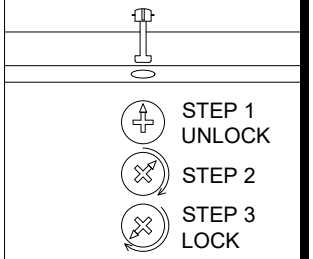

STEP 9

12		4 pcs

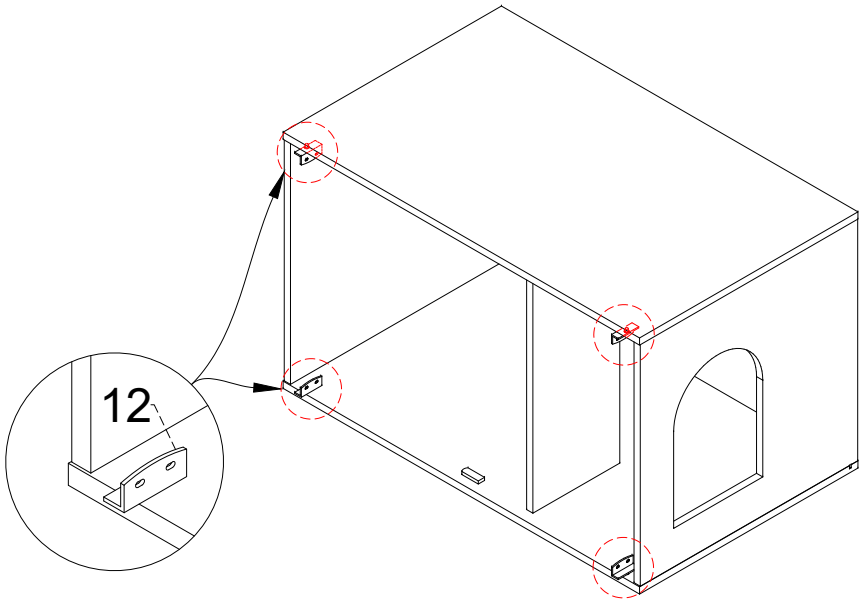

STEP 10

INSERT THE DOOR MUST BE ALIGN WITH THE DOOR STOPPER AS SHOWN.

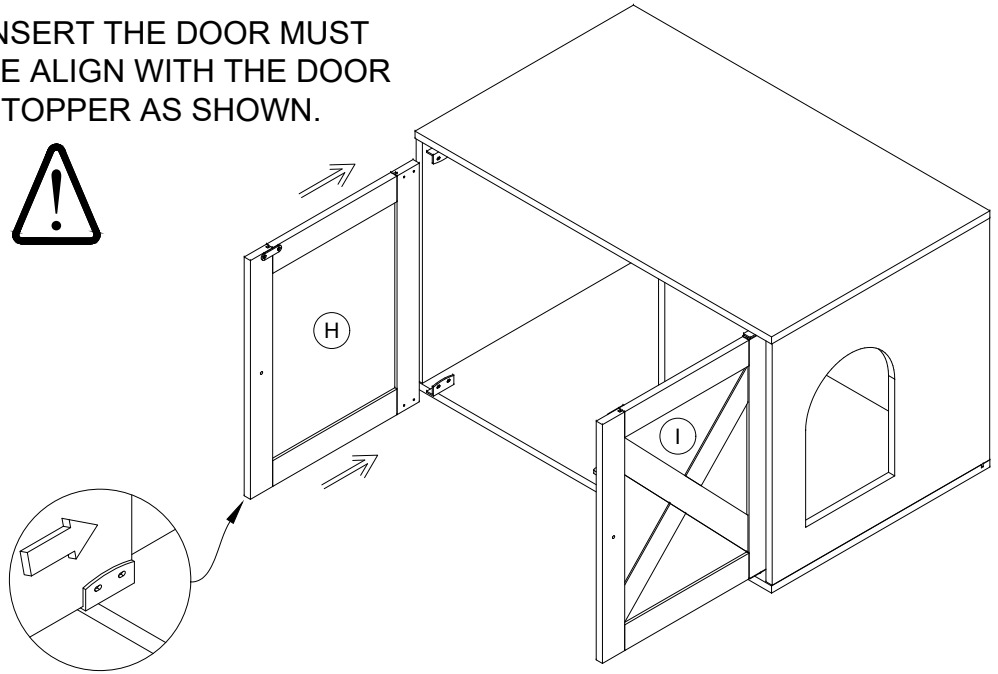

STEP 11

6		8 pcs
8		2 pcs
9		2 pcs

Recommend Maximum Weight

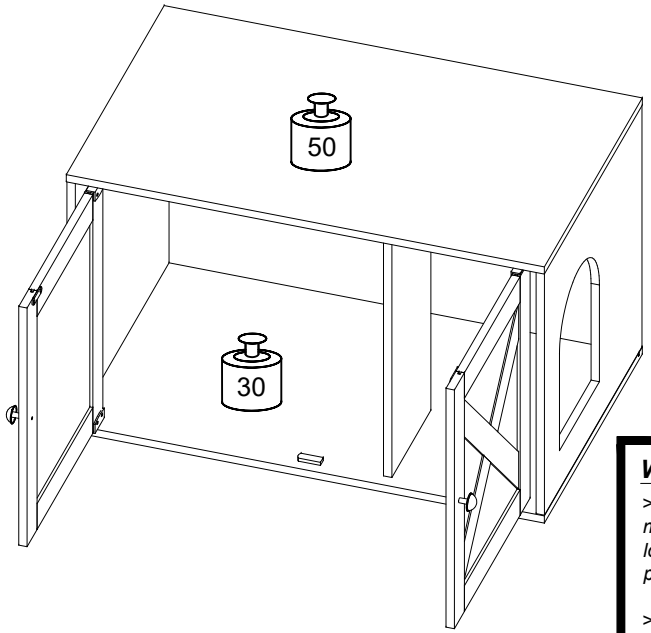

*Unit in Pound(lbs)

WARNING:

>This unit has been designed to support the maximum loads shown. Exceeding these load limits could cause sagging, instability, product collapse, and/or serious injury.

>DO NOT allow children to climb on unit.

>Put heavier items on lower shelves.