Furinno®
*Fits Space, Fits Budget*

00:30
Approx. 30 min

Recomm. 1 Person

Tools Required

# *Assembly Instruction*

Furinno Farmhouse Pet House

MODEL : FH22303

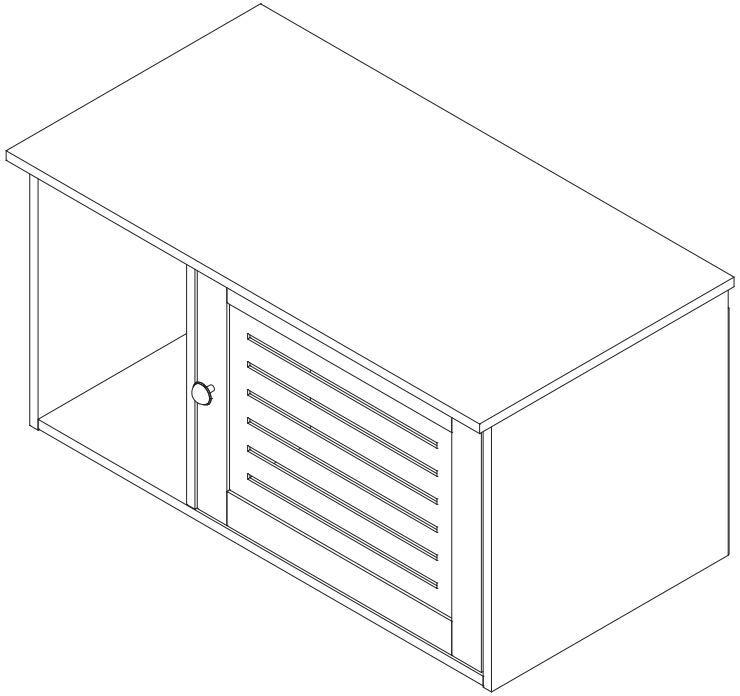

| No | Part List | | Qty |
|---|---|---|---|
| 1 | 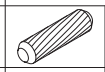 | Wood Dowel ⌀8x30mm | 12 pcs |
| 2 |  | Minifix Bolt | 11 pcs |
| 3 |  | Minifix Cam | 11 pcs |
| 4 |  | PVC Nail With Pin | 5 pcs |
| 5 |  | Magnet | 1 pc |
| 6 |  | Handle | 1 pc |
| 7 |  | Handle Screw ⌀4x19mm | 1 pc |
| 8 | 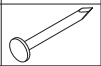 | Nail | 14 pcs |
| 9 |  | MT Door Stopper | 2 pcs |
| 10 |  | Unitar Screw ⌀6.3x40mm | 1 pc |
| 11 |  | Allen Key M4 | 1 pc |
| 12 |  | PVC Stopper | 1 pc |
| 13 |  | Screw ⌀3.5x14mm | 10 pcs |
| 14 |  | Magnet Plate | 1 pc |

| No | Part List | Qty |
|---|---|---|
| A | Left Side Panel | 1 pc |
| B | Right Side Panel | 1 pc |
| C | Top Panel | 1 pc |
| D | Bottom Panel | 1 pc |
| E | Middle Panel | 1 pc |
| F | Back Support Panel | 1 pc |
| G | Door Panel | 1 pc |
| H | Back Panel | 1 pc |

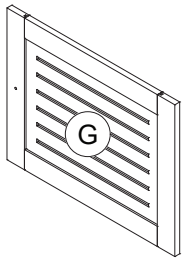


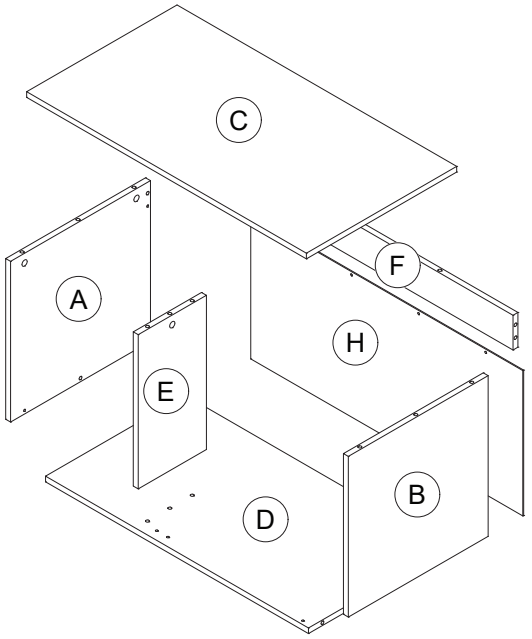


## *Customer Support*

NEED HELP? For replacement requests or product inquiries, please contact our Customer Service Team by emailing us at support@furinno.com. Thank you for selecting Furinno!

***www.furinno.com***

DO NOT FULLY TIGHTEN ANY BOLTS BEFORE ALL PARTS ARE LOOSELY ASSEMBLED. THE PRODUCT/ FITTINGS MAY BE DAMAGED IF OVERTIGHTENED. BEWARE OF CROSS THREADING SCREWS AND BOLTS DURINGS ASSEMBLY SMALL COMPONENT PARTS COULD CHOKE A CHILD IF SWALLOWED. WE STRONGLY RECOMMEND THAT YOU KEEP. CHILDREN AWAY FROM THE WORK AREA.

## STEP 1

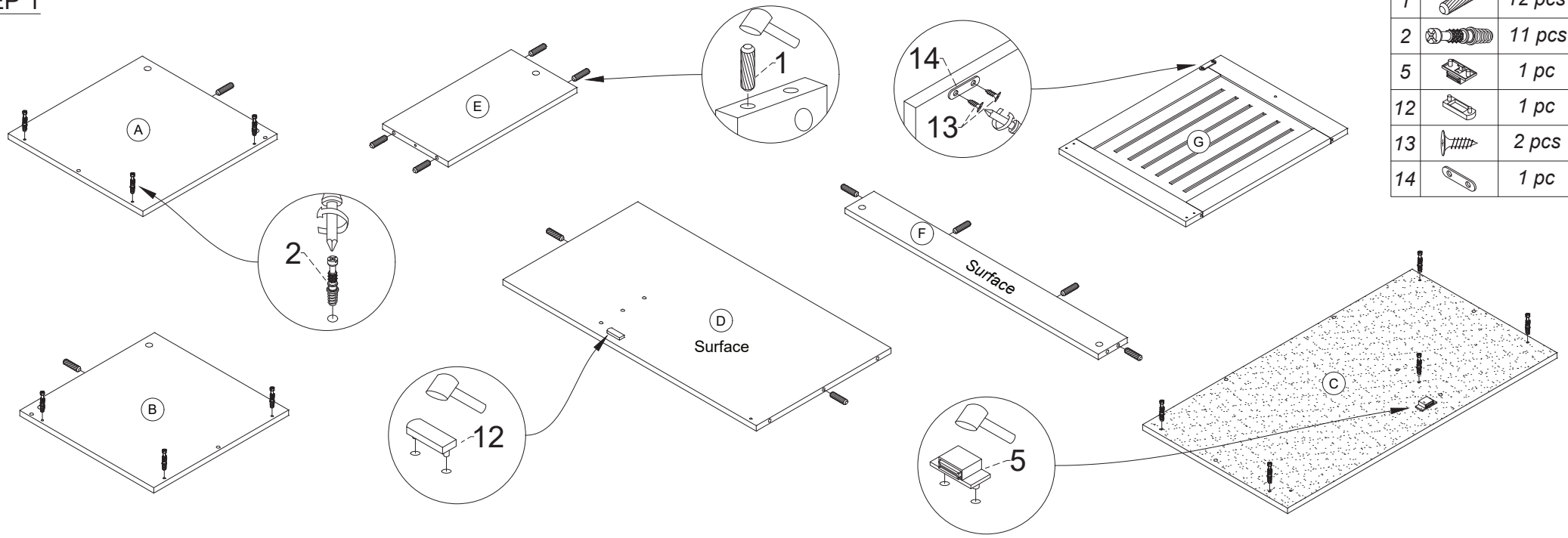


| | | |
|---|---|---|
| 1 | | 12 pcs |
| 2 | | 11 pcs |
| 5 | | 1 pc |
| 12 | | 1 pc |
| 13 | | 2 pcs |
| 14 | | 1 pc |

## STEP 2

| | | |
|---|---|---|
| 3 | | 3 pcs |

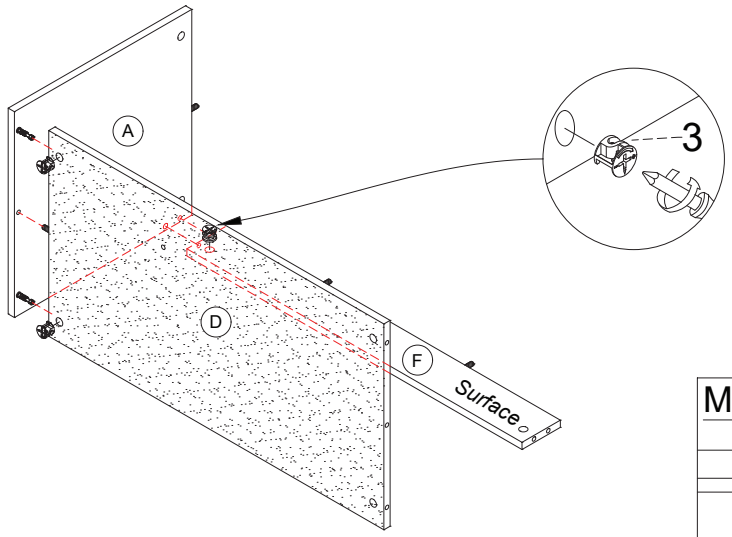


### Minifix Setup :

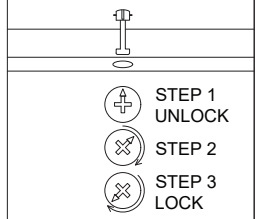


## STEP 3

| | | |
|---|---|---|
| 3 | | 3 pcs |

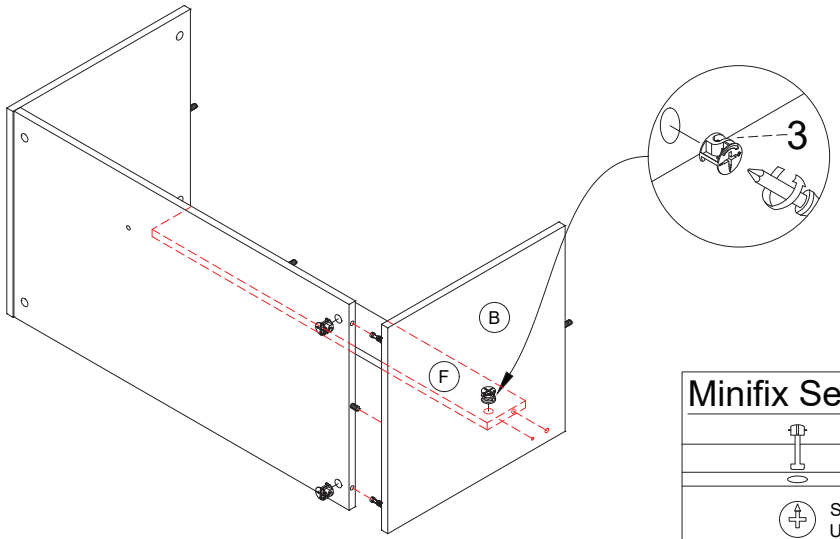


### Minifix Setup :

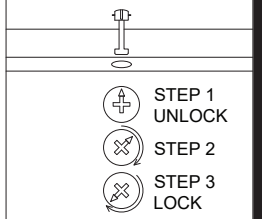

## STEP 4

| | | |
|---|---|---|
| 10 |  | 1 pc |
| 11 |  | 1 pc |

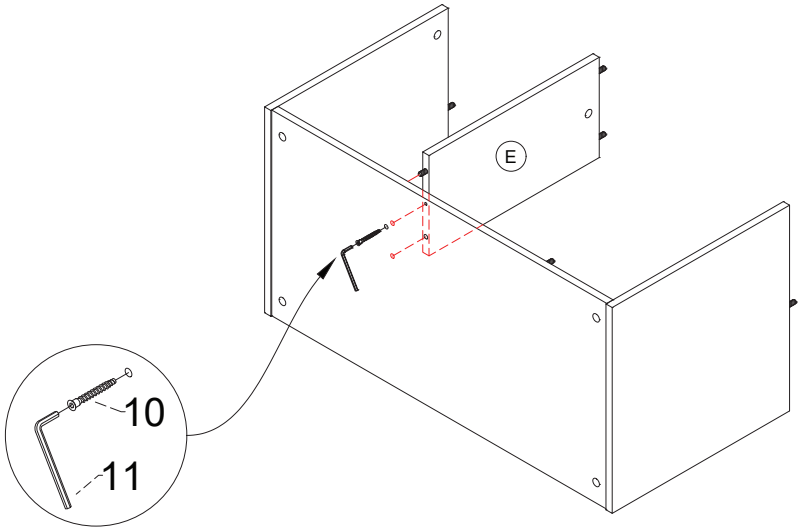


## STEP 5

| | | |
|---|---|---|
| 3 |  | 5 pcs |

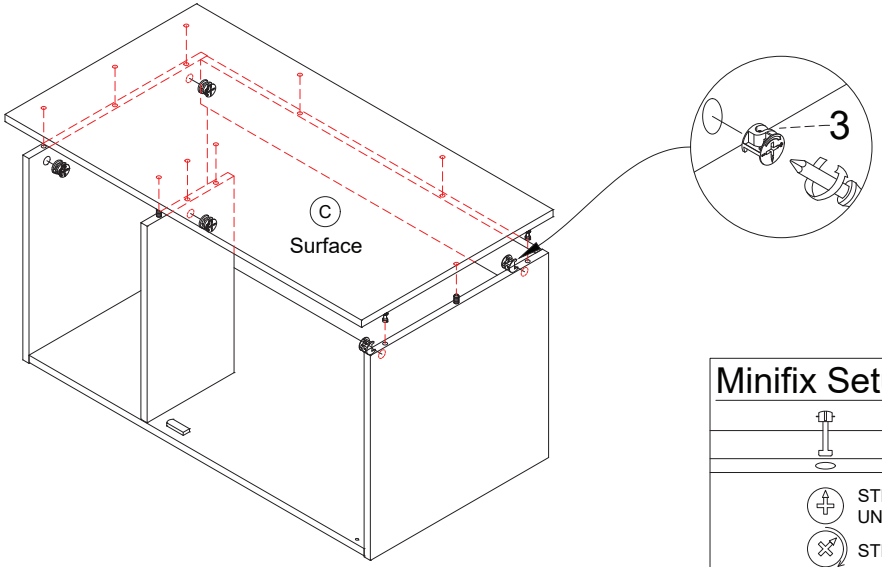


### Minifix Setup :

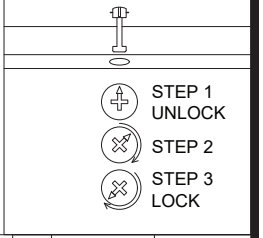


## STEP 6

| | | |
|---|---|---|
| 8 |  | 14 pcs |
| 13 |  | 4 pcs |






PLEASE ENSURE THAT EACH OF THE FOUR CORNERS OF THE CABINET IS SQUARE.

## STEP 7

| | | |
|---|---|---|
| 4 |  | 5 pcs |

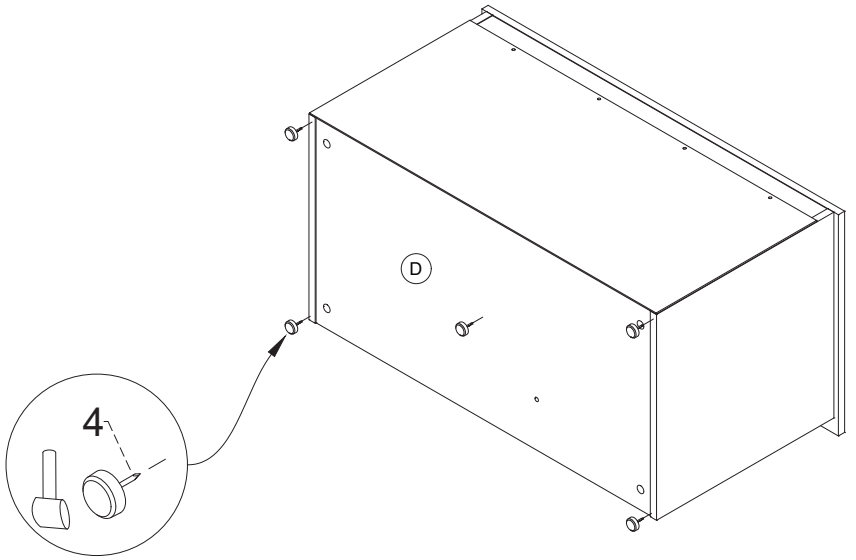

## STEP 8

| | | |
|---|---|---|
| 9 |  | 2 pcs |

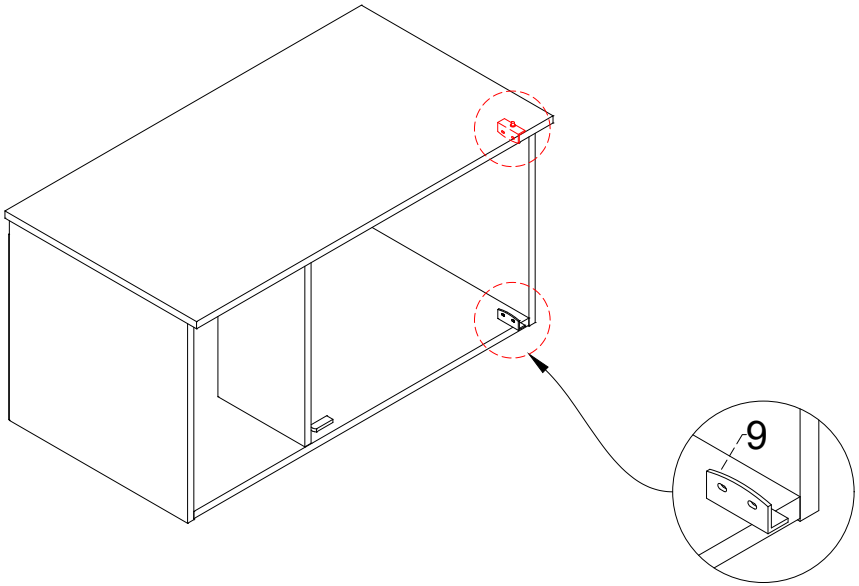


## STEP 9

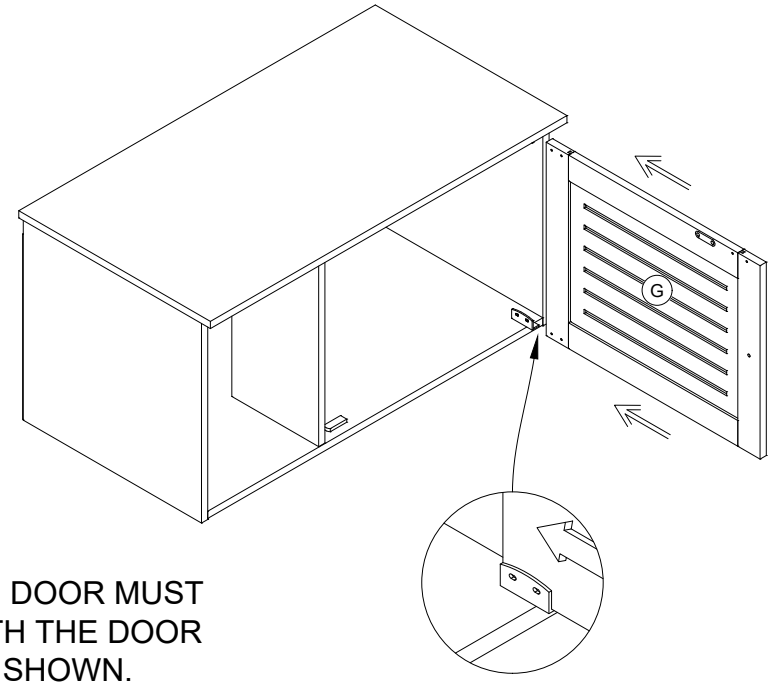


* INSERT THE DOOR MUST BE ALIGN WITH THE DOOR STOPPER AS SHOWN.

## STEP 10

| | | |
|---|---|---|
| 6 |  | 1 pc |
| 7 |  | 1 pc |
| 13 |  | 4 pcs |




## Recommend Maximum Weight

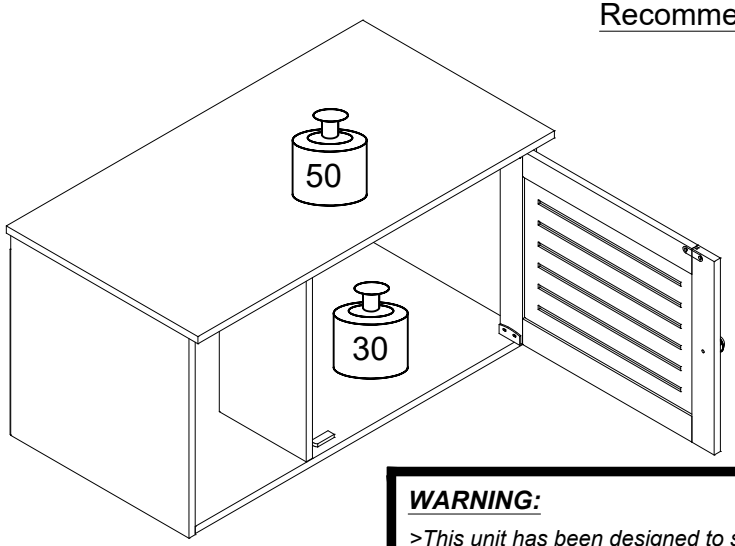


*Unit in Pound(lbs)

***WARNING:***

*>This unit has been designed to support the maximum loads shown. Exceeding these load limits could cause sagging, instability, product collapse, and/or serious injury.*

*>DO NOT allow children to climb on unit.*

*>Put heavier items on lower shelves.*