Furinno®
Fits Space, Fits Budget

00:45
Approx. 45 min

Recomm. 1 Person

Tools Required

Assembly Instruction

Furinno Farmhouse Pet House

MODEL : FH22306

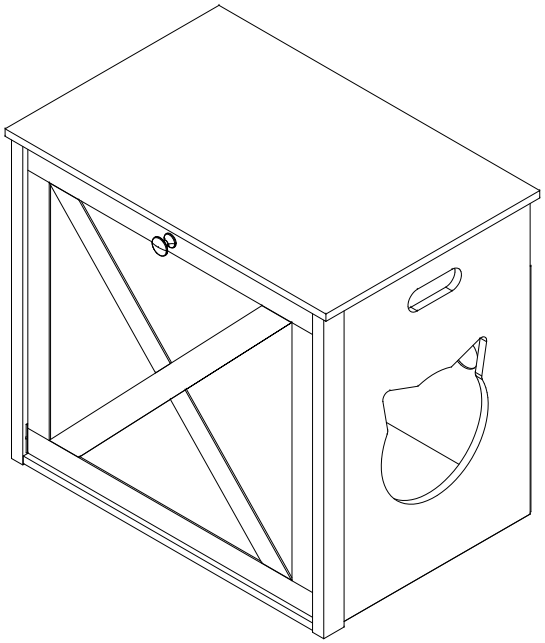

No	Part List	Qty
1	Wood Dowel ϕ6x30mm	8 pcs
2	Minifix Bolt	10 pcs
3	Minifix Cam	10 pcs
4	Magnet	2 pcs
5	Magnet Plate	2 pcs
6	Screw ϕ3.5x14mm	8 pcs
7	Screw ϕ3.5x12mm	4 pcs
8	Handle	1 pc
9	Screw ϕ4x25mm	1 pc
10	Nail	16 pcs
11	MT Door Stopper	2 pcs

No	Part List	Qty
A	Left Side Panel	1 pc
B	Right Side Panel	1 pc
C	Top Panel	1 pc
D	Bottom Panel	1 pc
E	Back Panel	1 pc
F	Support Panel	1 pc
G	Door Panel	1 pc

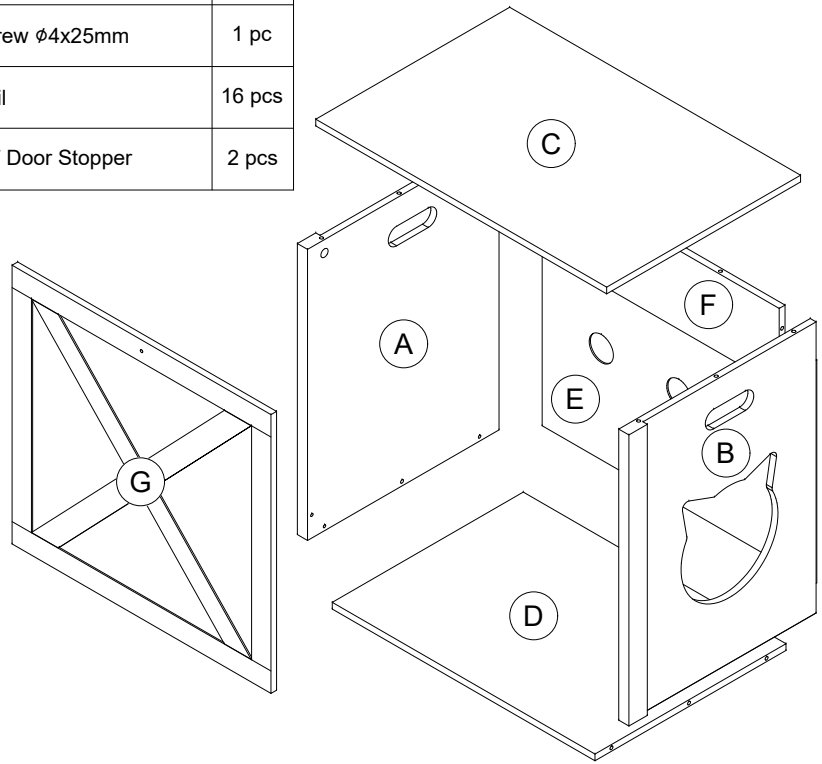

Customer Support

NEED HELP? For replacement requests or product inquiries, please contact our Customer Service Team by emailing us at support@furinno.com. Thank you for selecting Furinno!

www.furinno.com

DO NOT FULLY TIGHTEN ANY BOLTS BEFORE ALL PARTS ARE LOOSELY ASSEMBLED. THE PRODUCT/ FITTINGS MAY BE DAMAGED IF OVERTIGHTENED. BEWARE OF CROSS THREADING SCREWS AND BOLTS DURINGS ASSEMBLY SMALL COMPONENT PARTS COULD CHOKE A CHILD IF SWALLOWED. WE STRONGLY RECOMMEND THAT YOU KEEP. CHILDREN AWAY FROM THE WORK AREA.

STEP 1

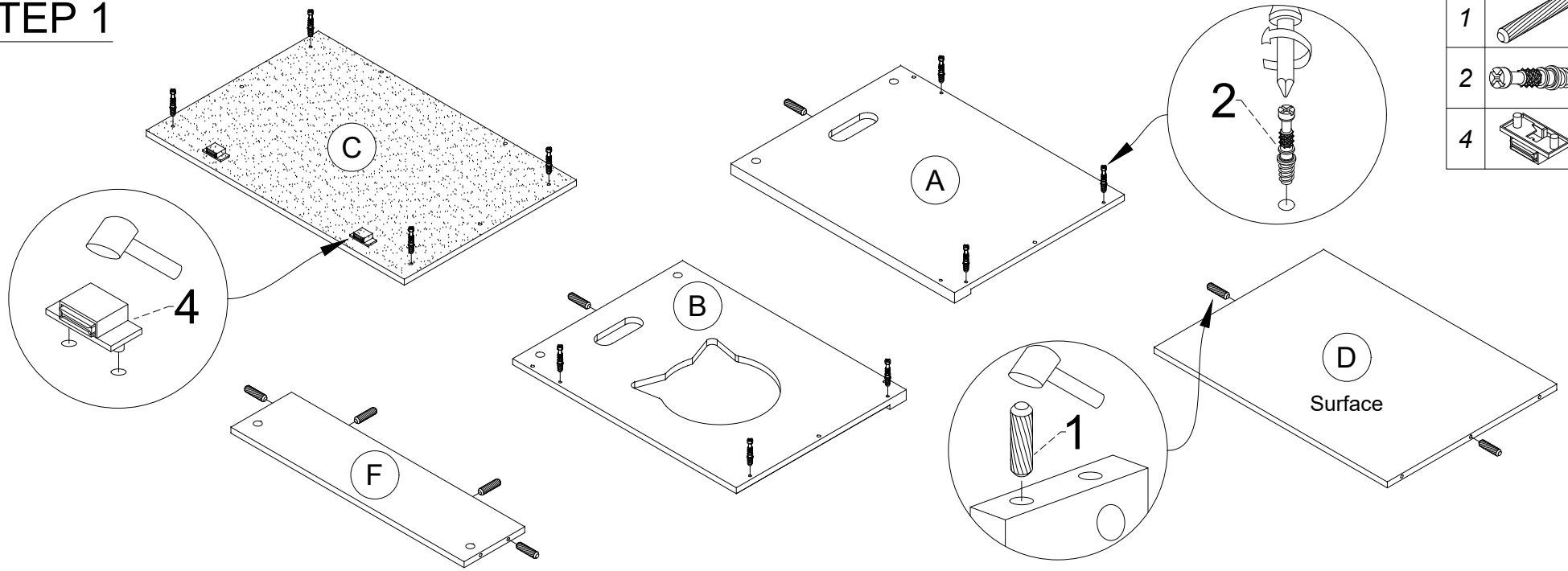

1		8 pcs
2		10 pcs
4		2 pcs

STEP 2

3		6 pcs

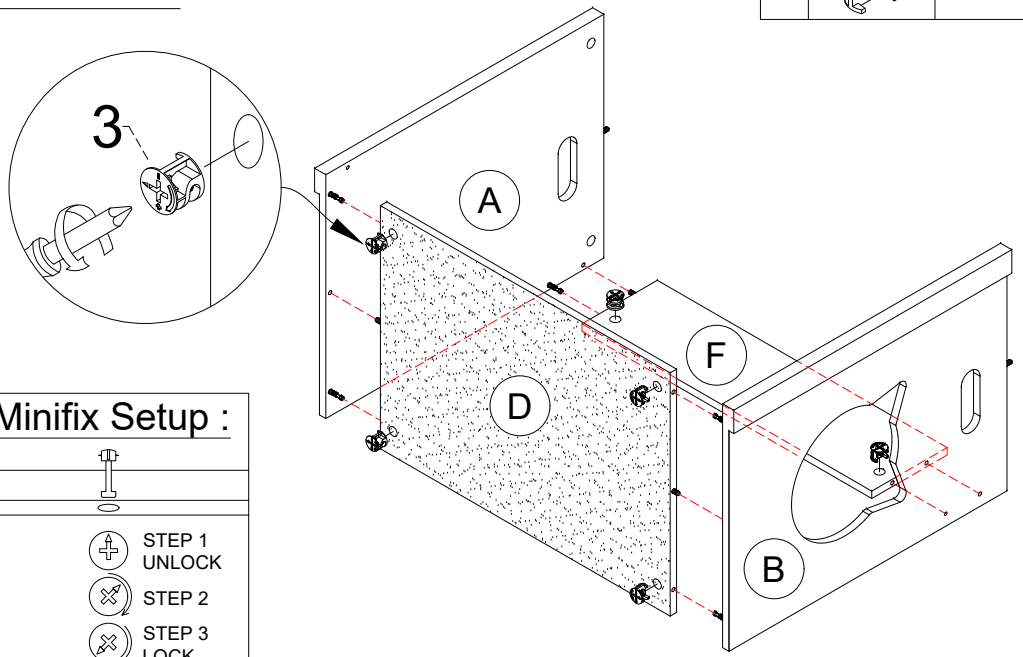

Minifix Setup :

STEP 3

3		4 pcs

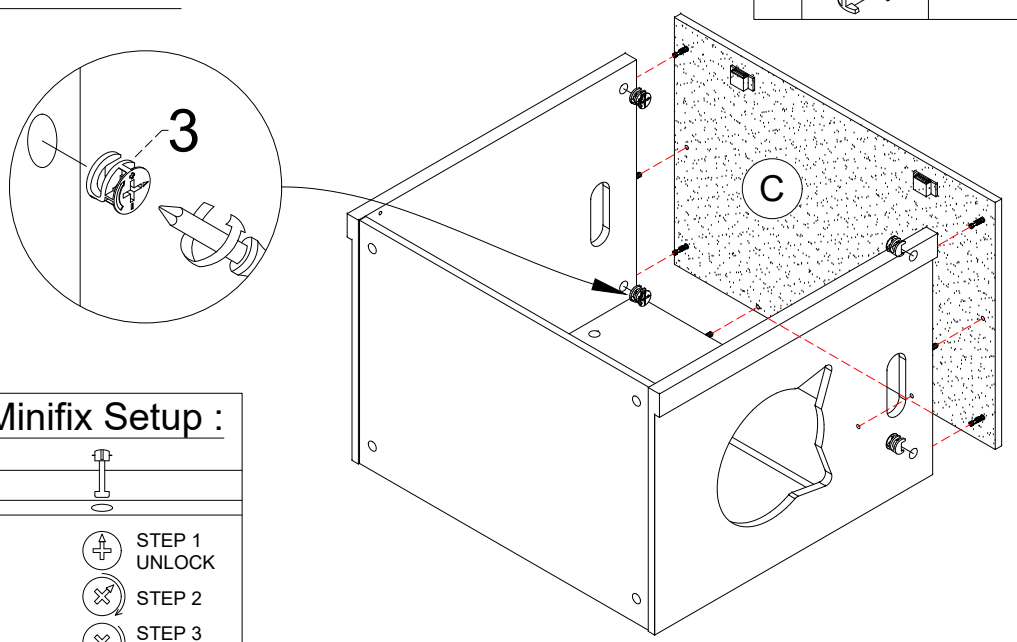

Minifix Setup :

STEP 4

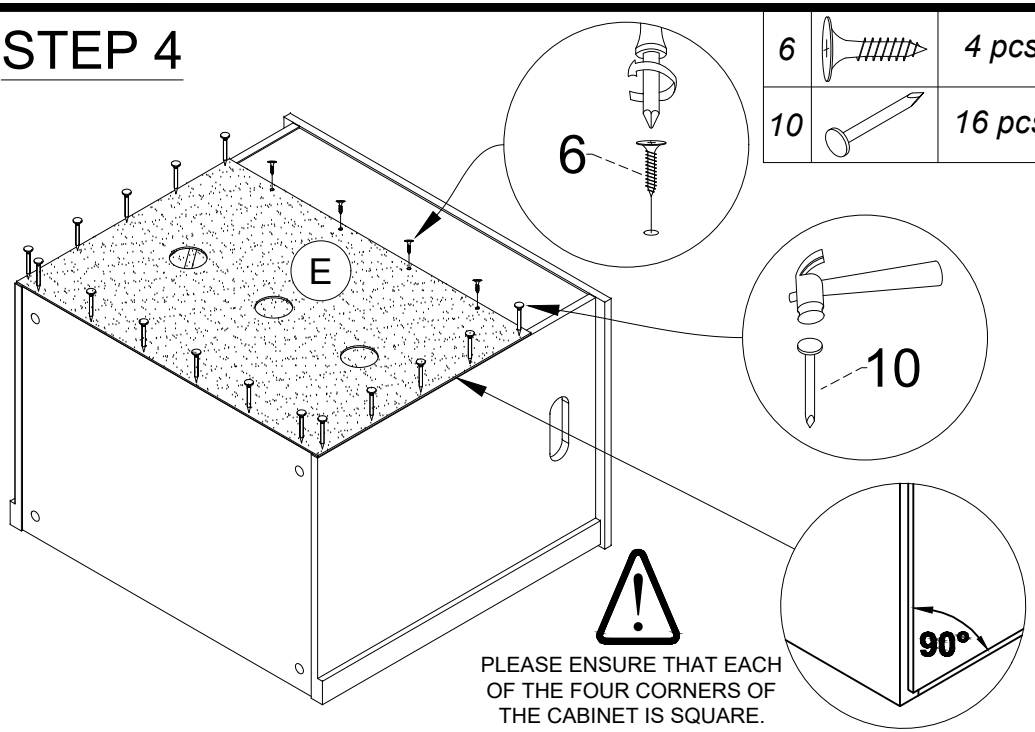

6		4 pcs
10		16 pcs

PLEASE ENSURE THAT EACH OF THE FOUR CORNERS OF THE CABINET IS SQUARE.

STEP 5

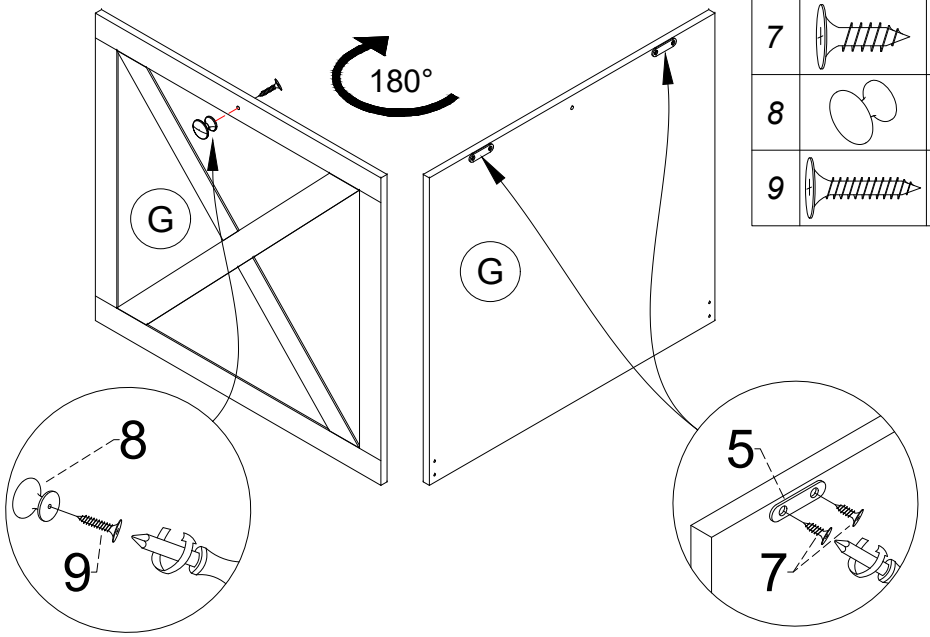

5		2 pcs
7		4 pcs
8		1 pc
9		1 pc

STEP 6

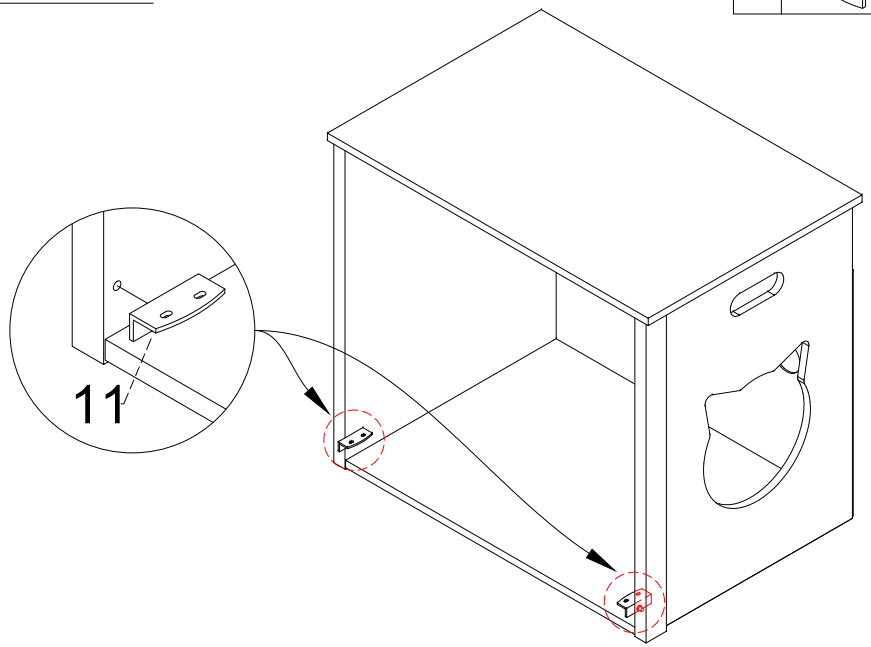

11		2 pcs

STEP 7

INSERT THE DOOR MUST BE ALIGN WITH DOOR STOPPER AS SHOWN.

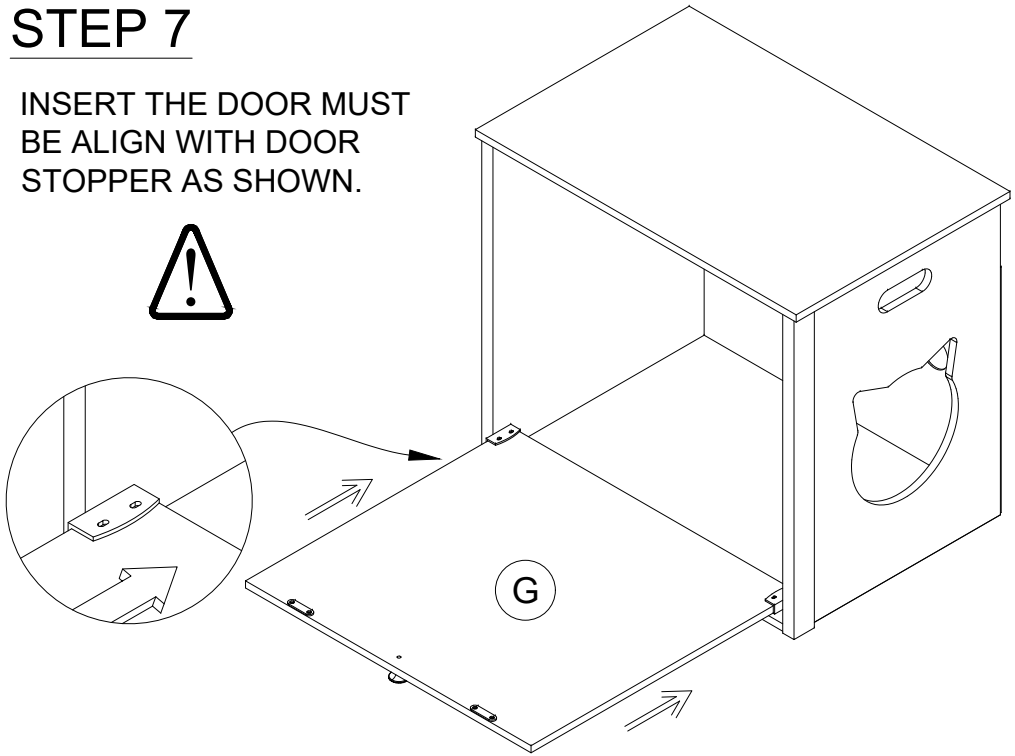

STEP 8

6	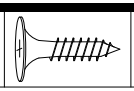	4 pcs

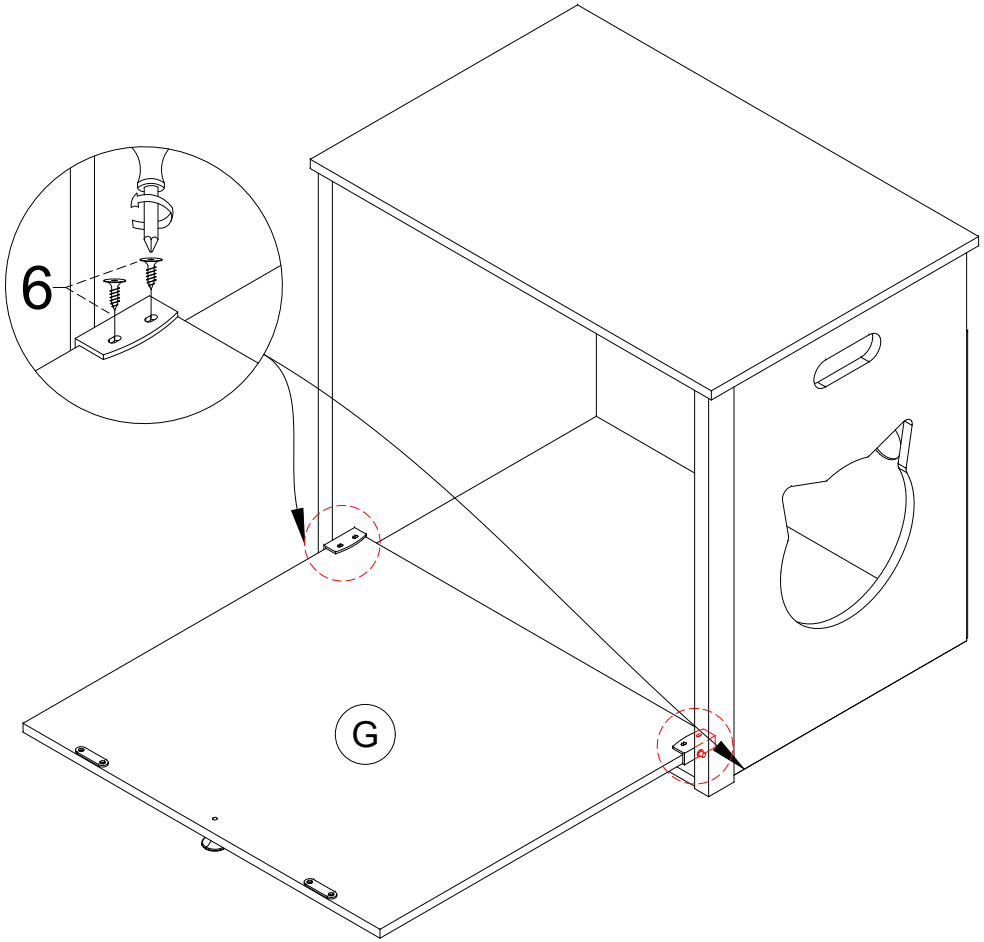

Recommend Maximum Weight

WARNING:

>This unit has been designed to support the maximum loads shown. Exceeding these load limits could cause sagging, instability, product collapse, and/or serious injury.

>DO NOT allow children to climb on unit.

>Put heavier items on lower shelves.

*Unit in Pound(lbs)

