

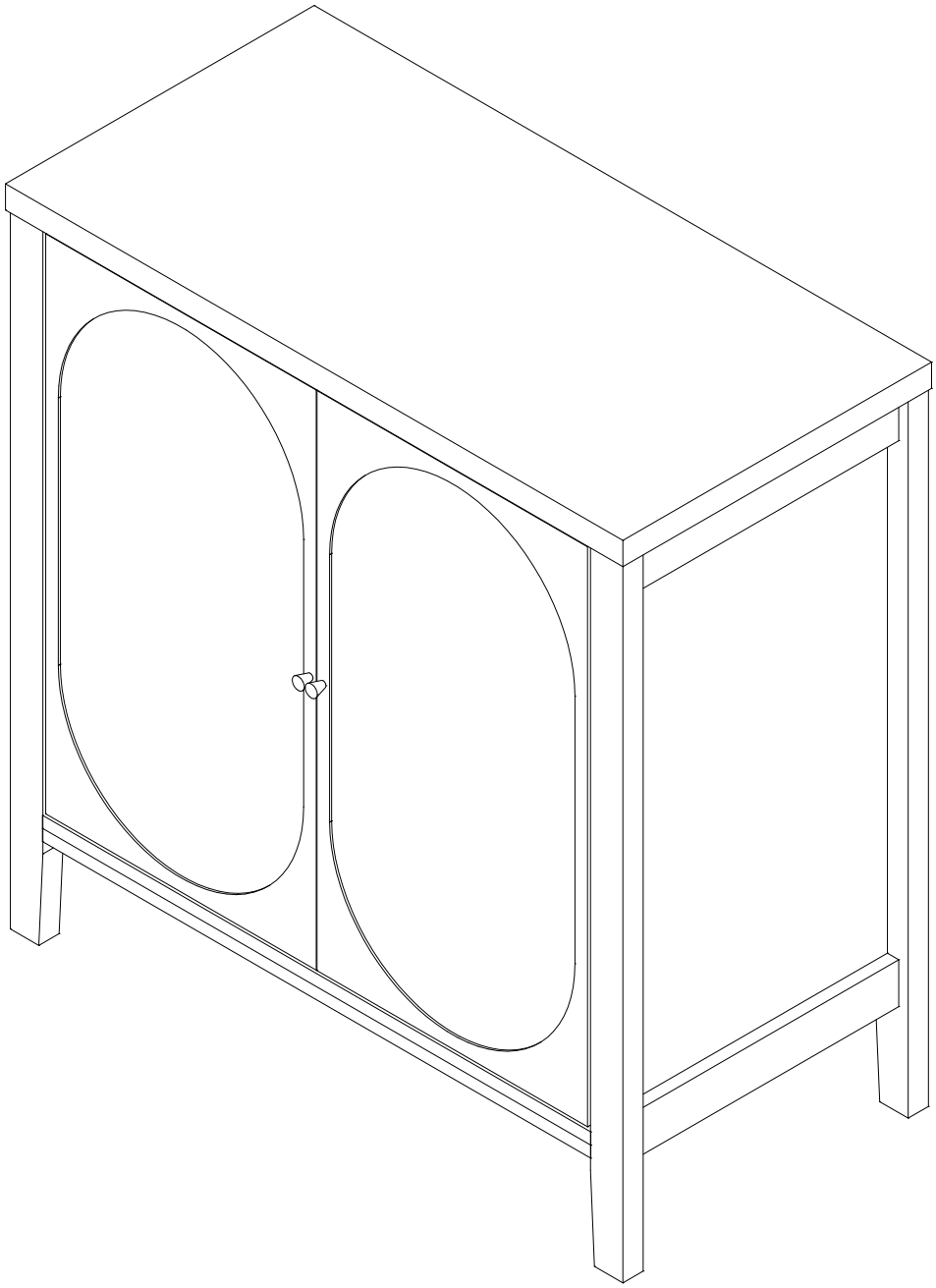

MODEL: FH26701

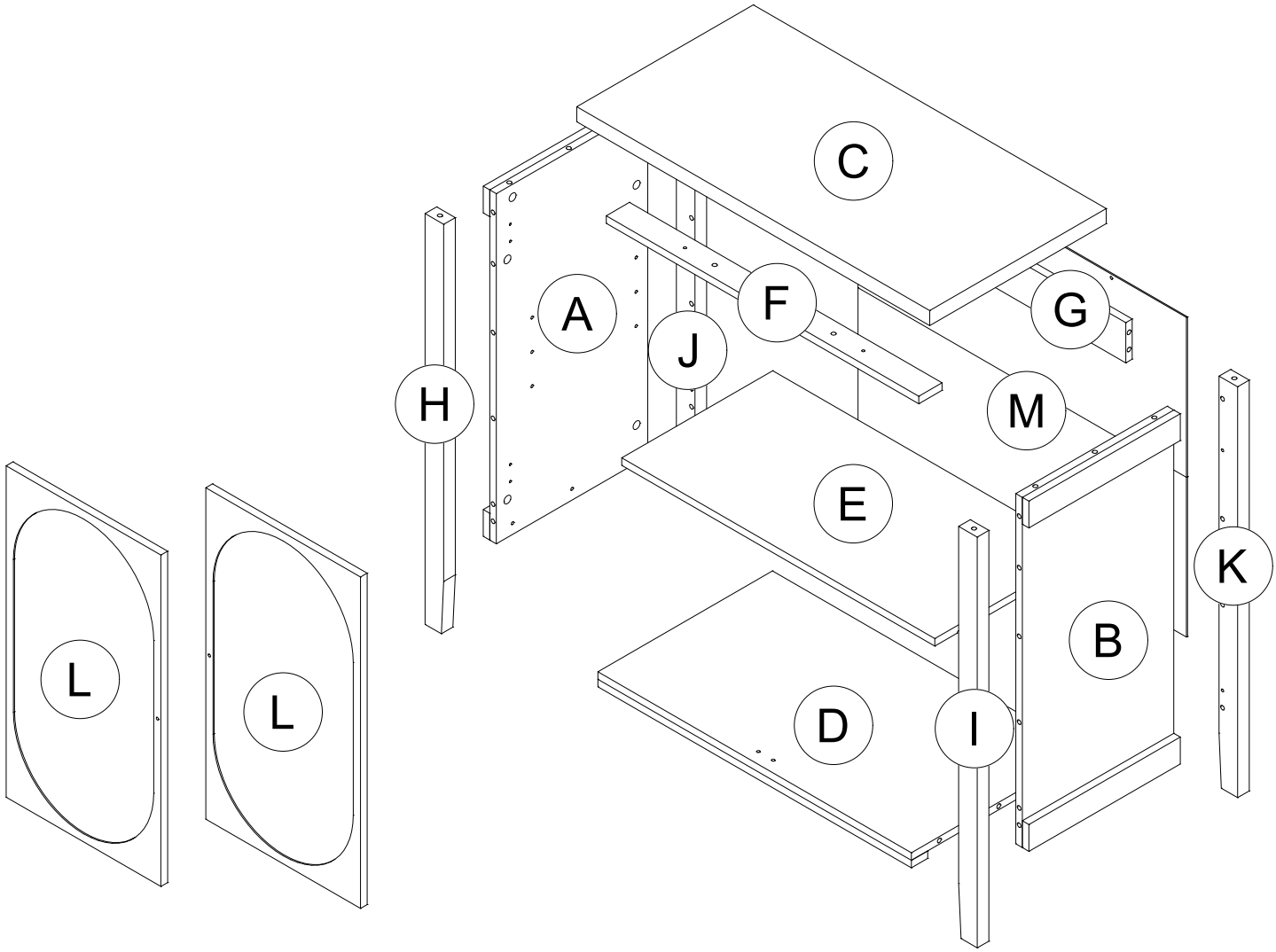

1 x18  EU 24	2 x18 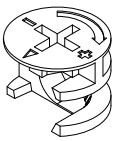 15/9.5	3 x28  M8 X 30mm	4 x4 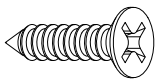 M3.5 x 15mm	5 x4 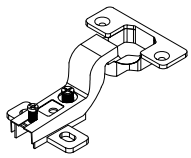
6 x11 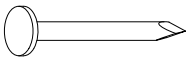	7 x1 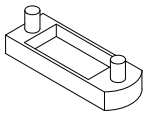	8 x2 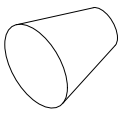	9 x2 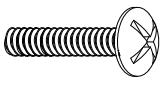 M4 x 20mm	10 x4 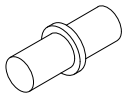
11 x2  M8 X 20mm	12 x2 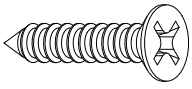 M4 x 28mm	13 x16 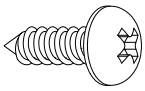 #10 x ½"	14 x1 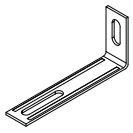	15 x1 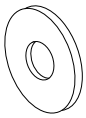 M6 x 16mm
16 x1 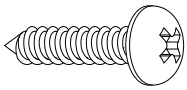 #10 x 16mm	17 x1 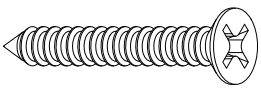 M4 x 38mm			

1

15		1 pc	1	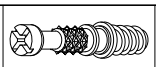	18 pcs
16	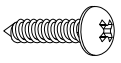	1 pc	3		28 pcs
			7		1 pc
			11		2 pcs
			14		1 pc

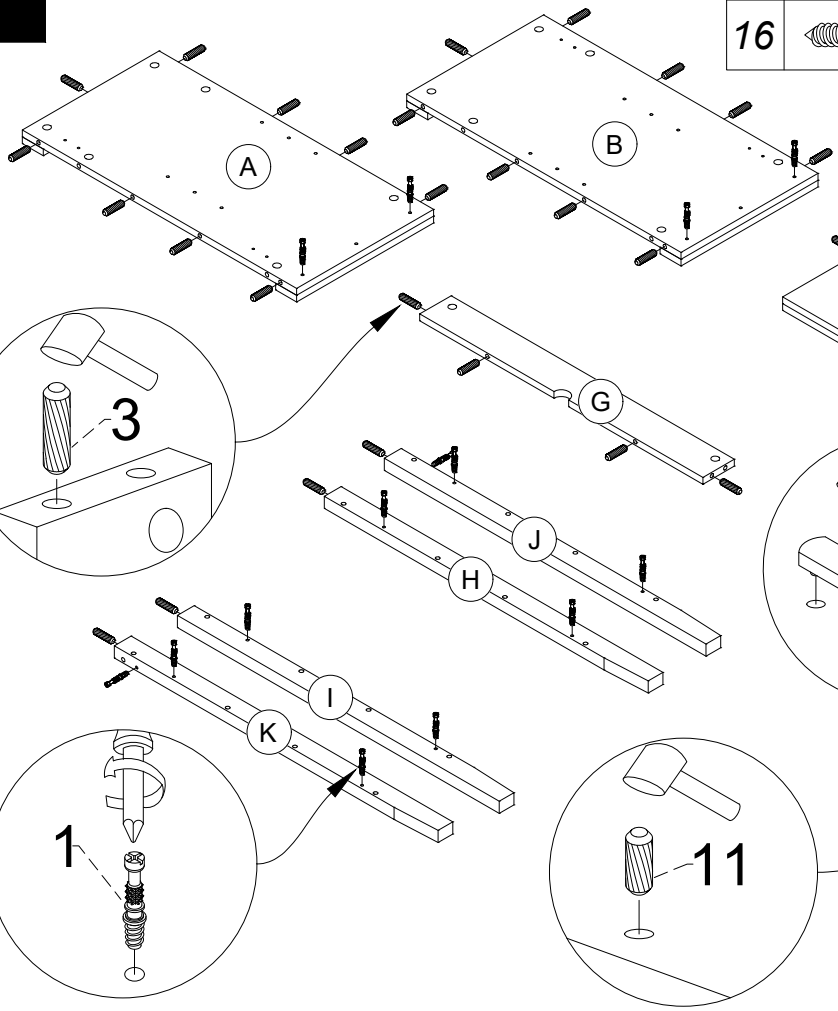

2

2		8 pcs

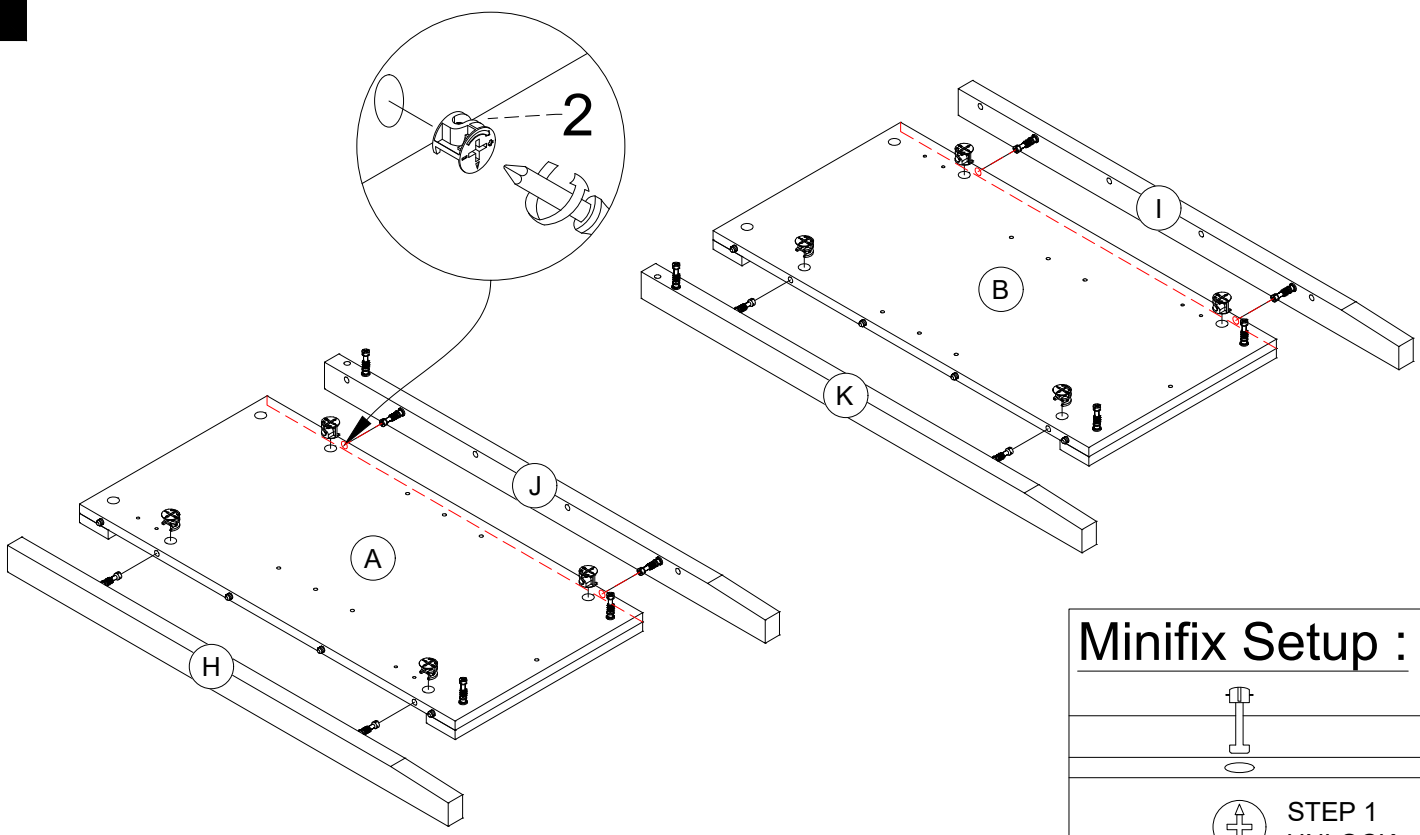

Minifix Setup :



3

2		6 pcs

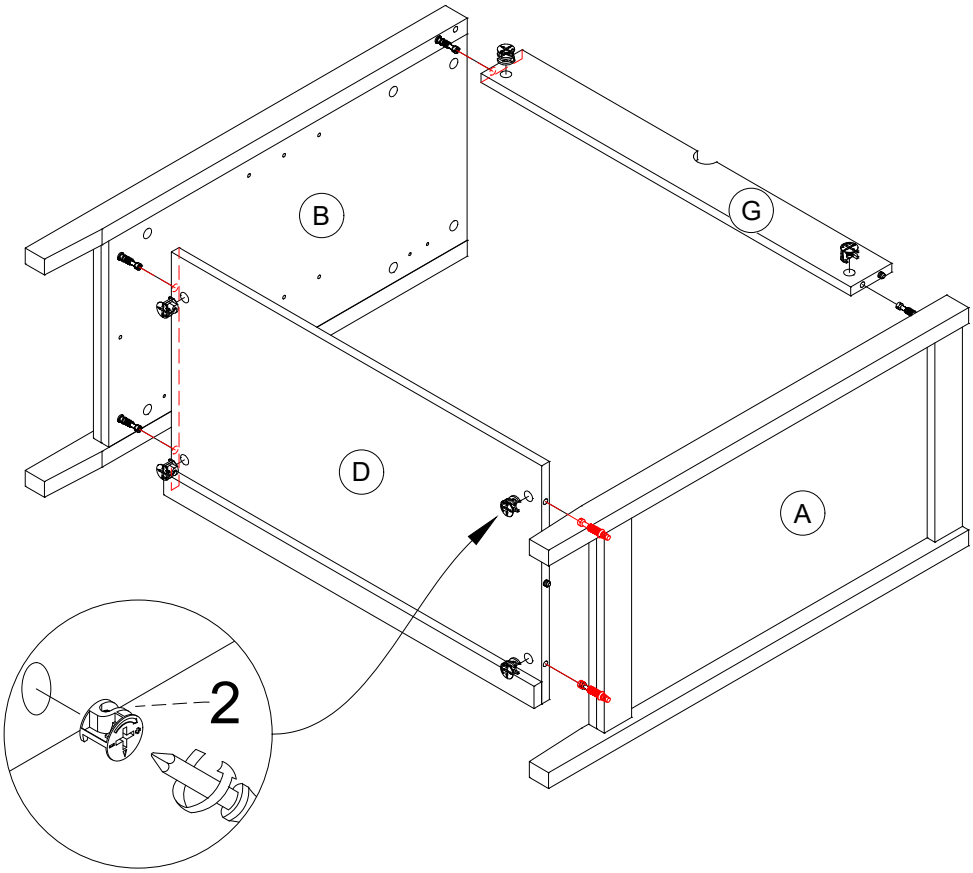

Minifix Setup :

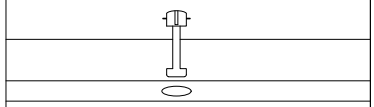

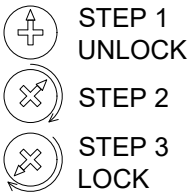

4

12		2 pcs

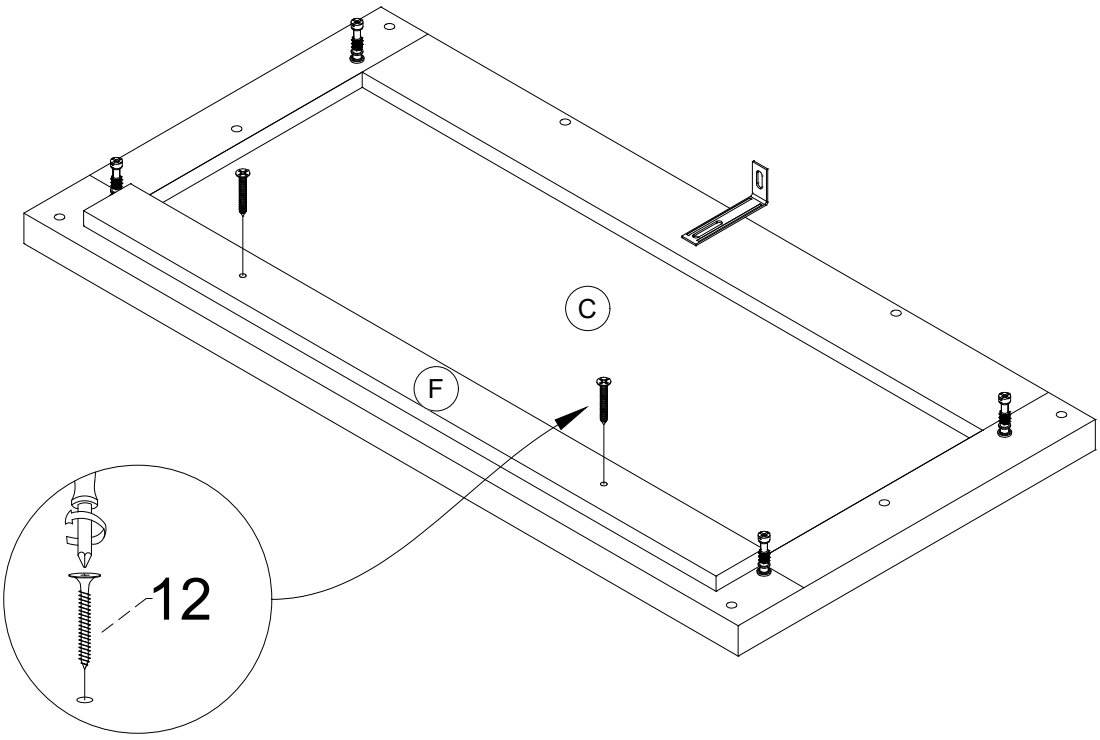

5

2		4 pcs

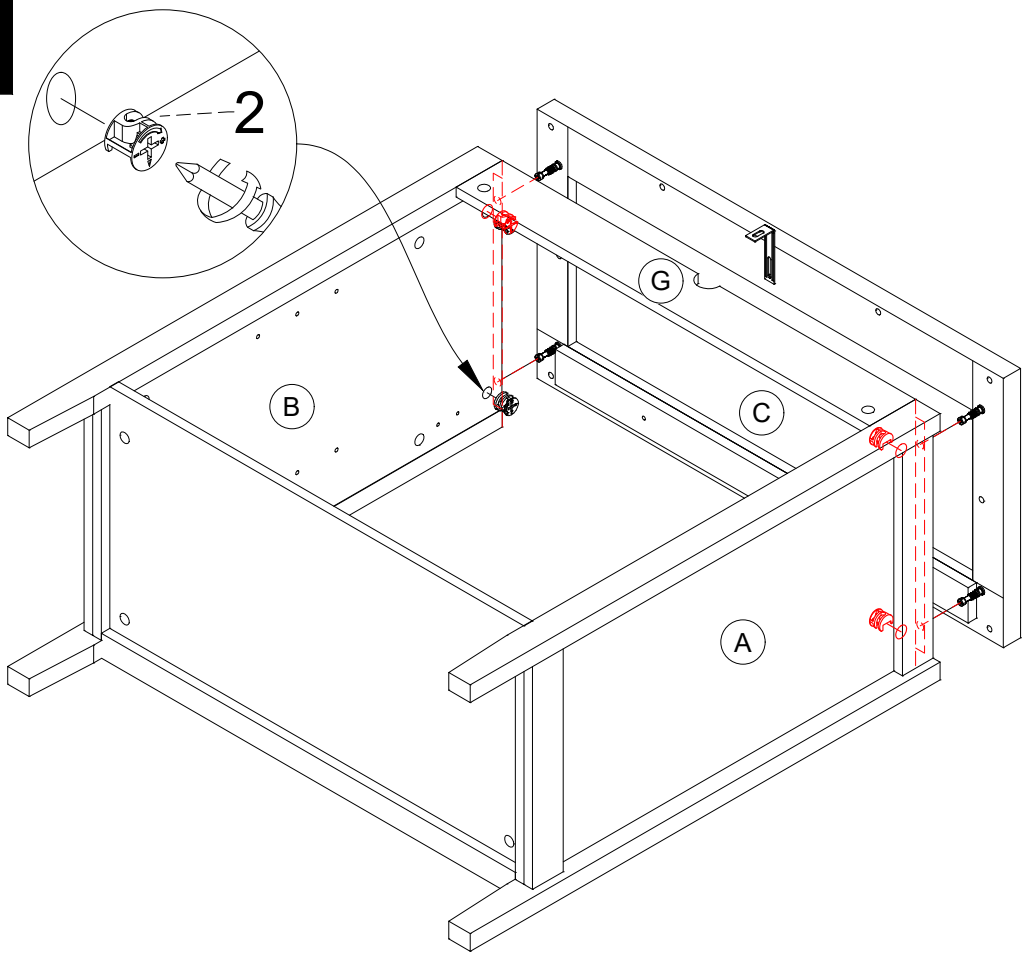

Minifix Setup :

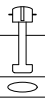

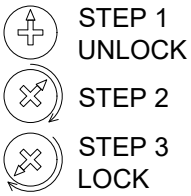

6

6		11 pcs
4		4 pcs

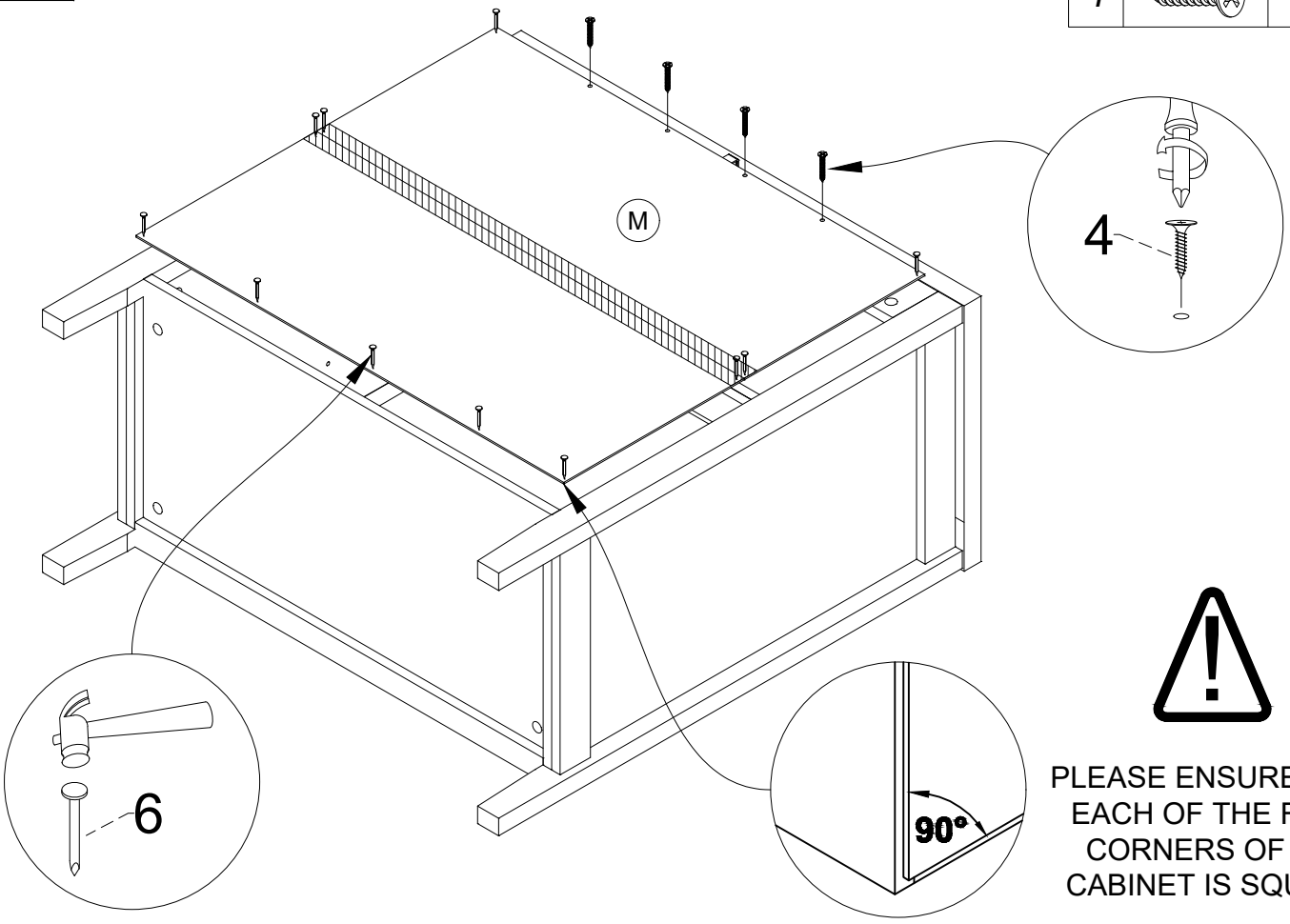

PLEASE ENSURE THAT EACH OF THE FOUR CORNERS OF THE CABINET IS SQUARE.

7

10		4 pcs

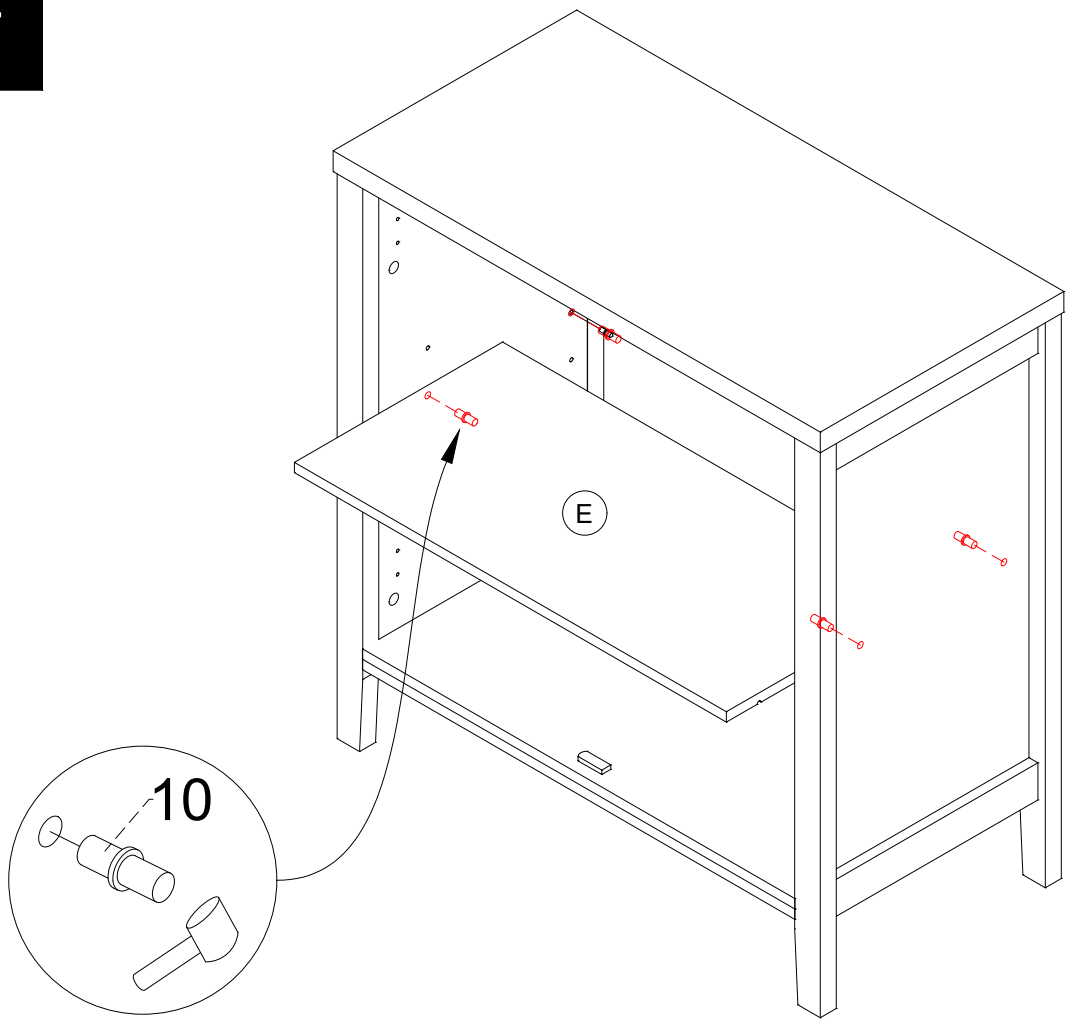

8

PLEASE PUT ANOTHER
BOARD IN ORDER TO ALIGN
THE HINGES ACCORDINGLY.

5		4 pcs
13		8 pcs

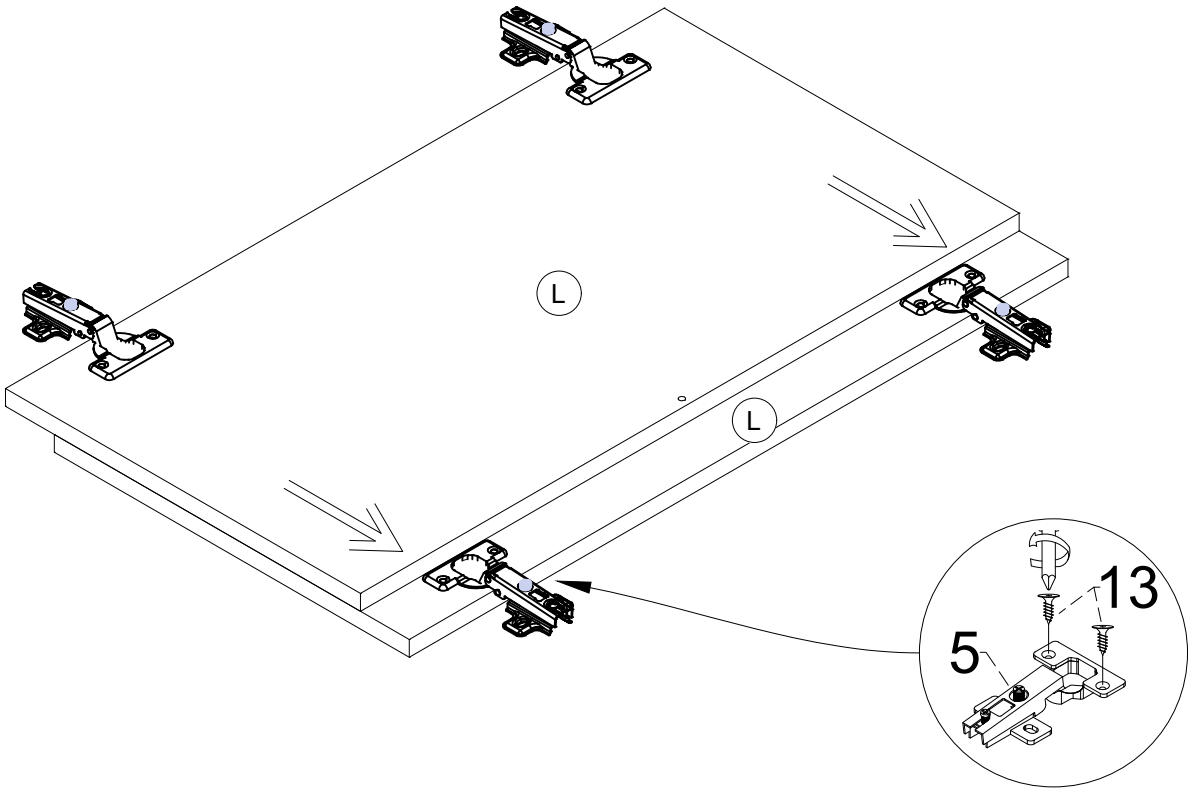

9

8		2 pcs
9		2 pcs
13		8 pcs

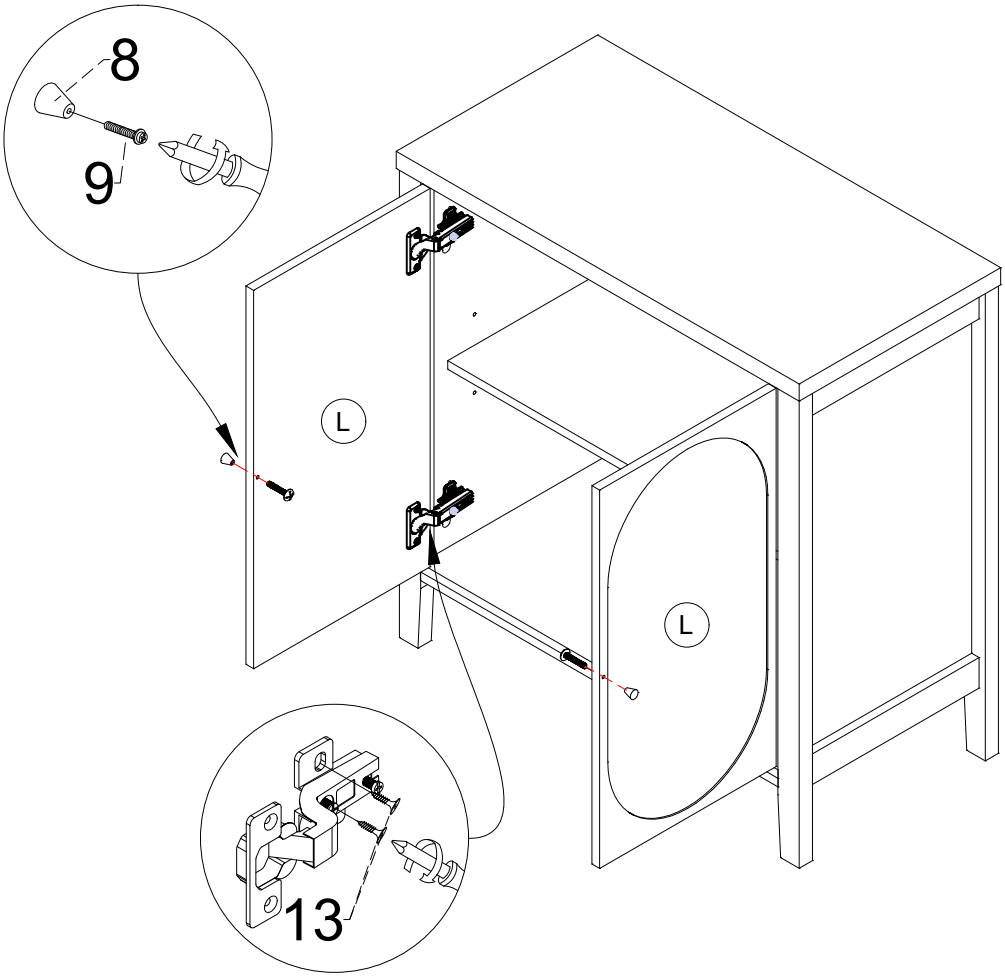

10

17		1 pc

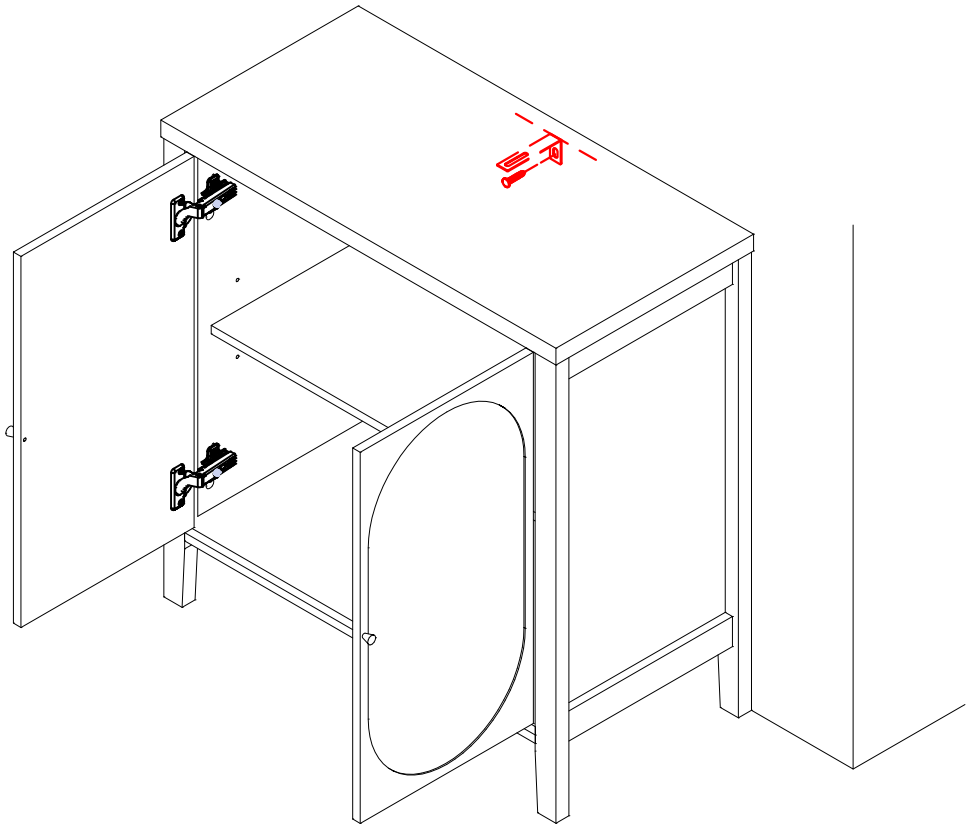

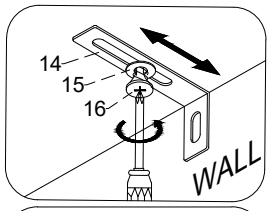

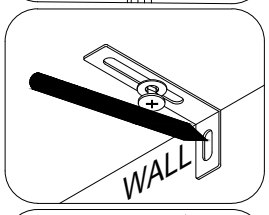

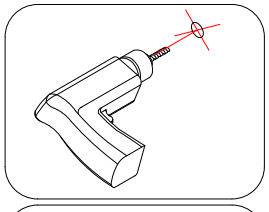

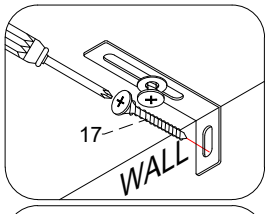

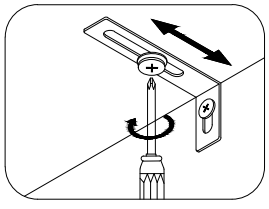

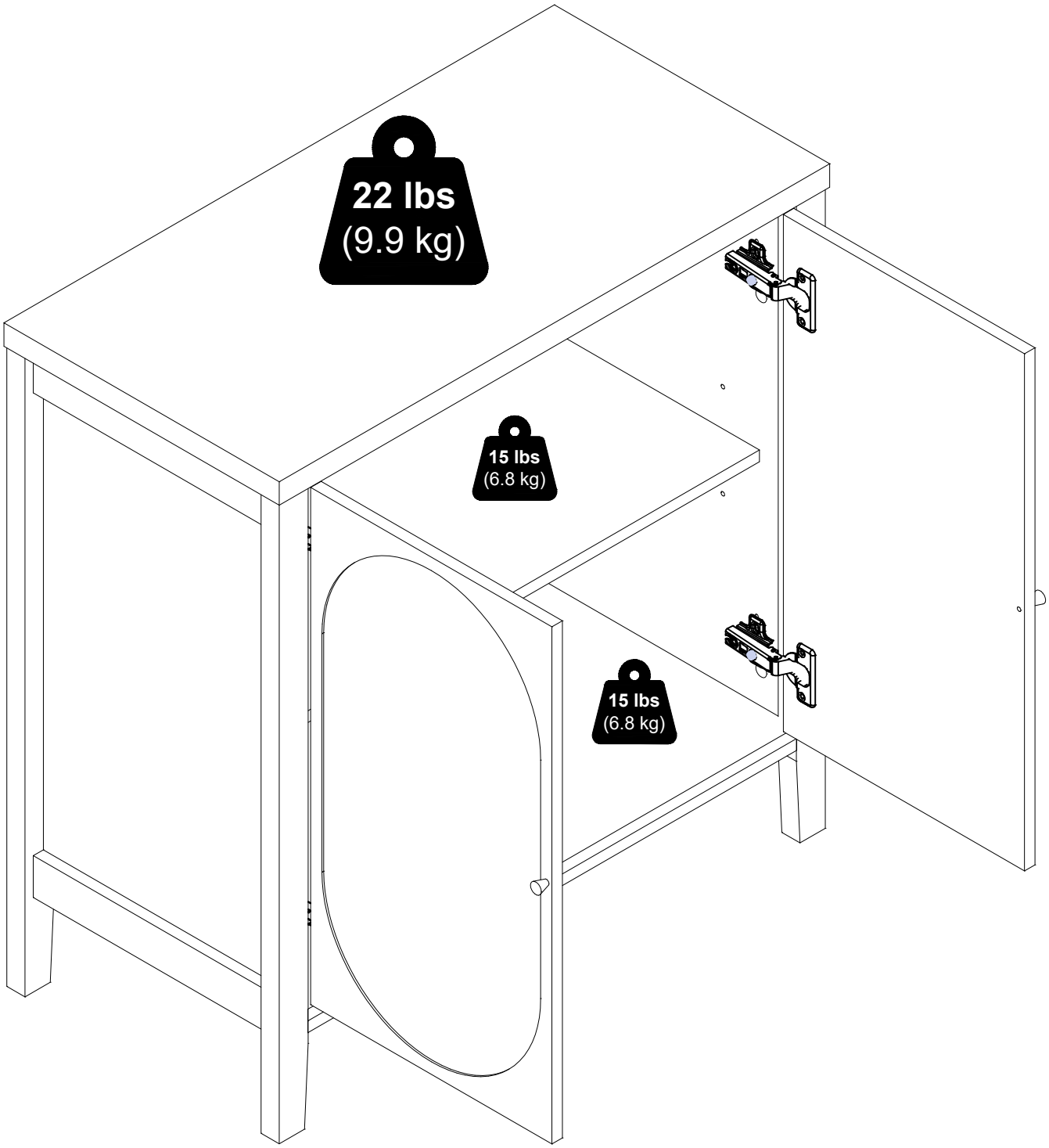
22 lbs
(9.9 kg)
15 lbs
(6.8 kg)
15 lbs
(6.8 kg)