

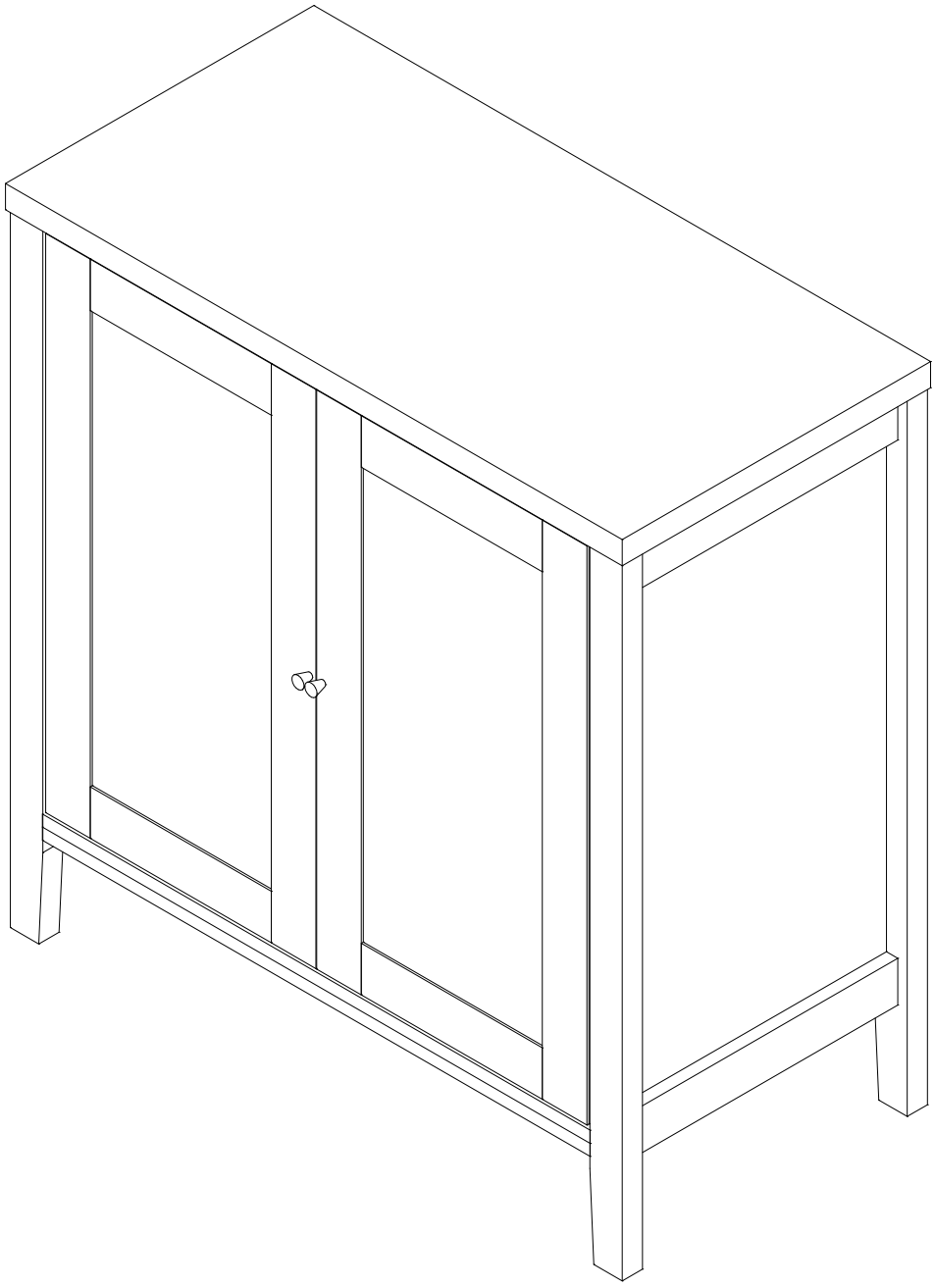

# MODEL: FH26702

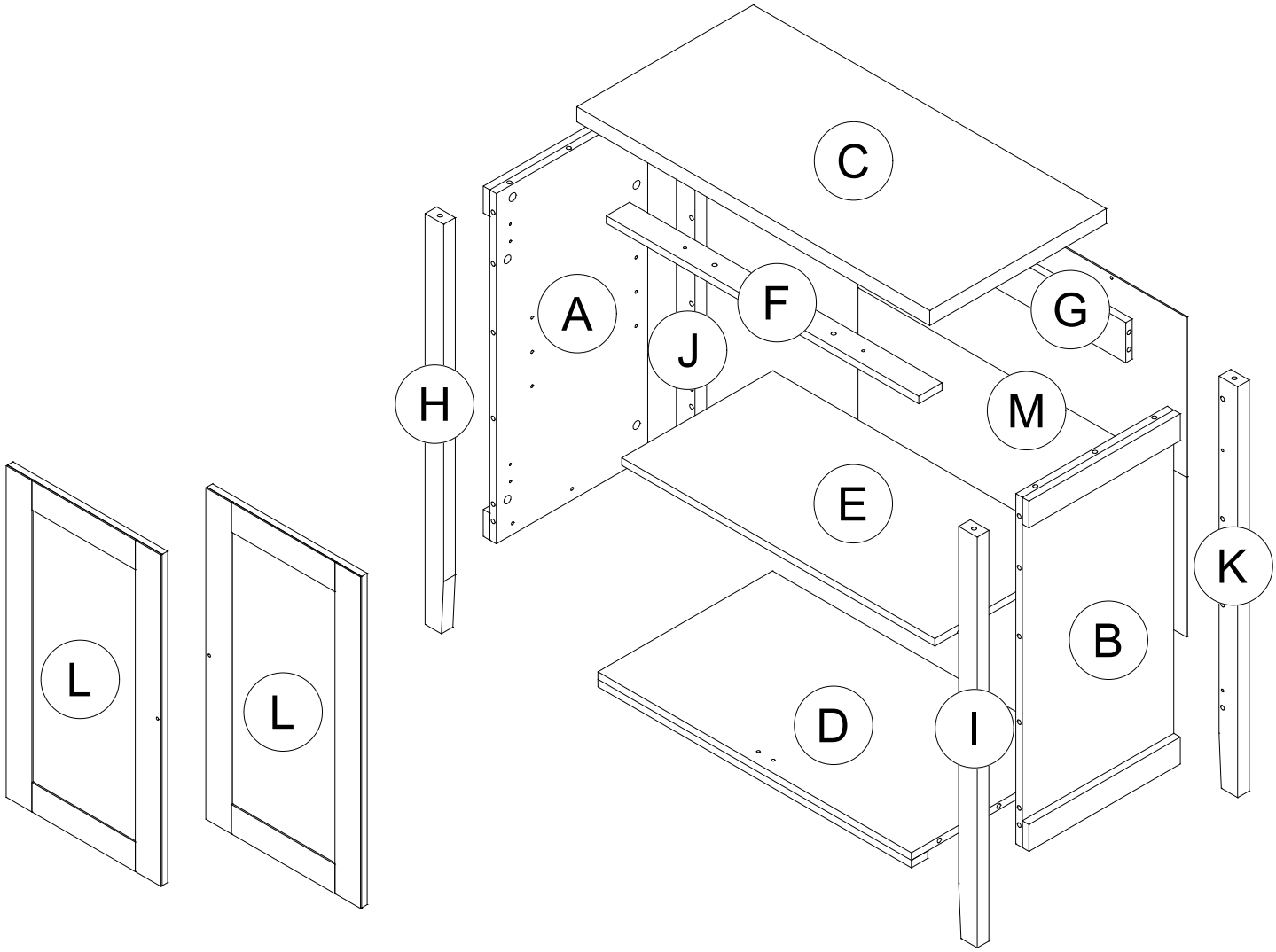


| | | | | |
|---|---|---|---|---|
| 1 x18<br><br>EU 24 | 2 x18<br>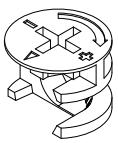<br>15/9.5 | 3 x28<br><br>M8 X 30mm | 4 x4<br>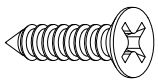<br>M3.5 x 15mm | 5 x4<br>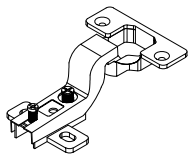 |
| 6 x11<br>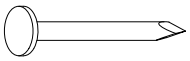 | 7 x1<br>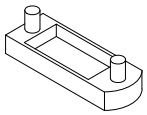 | 8 x2<br>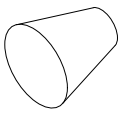 | 9 x2<br>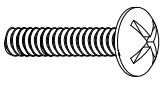<br>M4 x 20mm | 10 x4<br>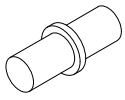 |
| 11 x2<br><br>M8 X 20mm | 12 x2<br>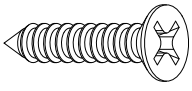<br>M4 x 28mm | 13 x16<br>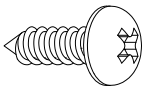<br>#10 x ½" | 14 x1<br>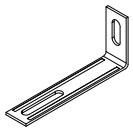 | 15 x1<br>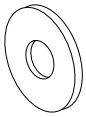<br>M6 x 16mm |
| 16 x1<br>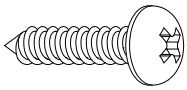<br>#10 x 16mm | 17 x1<br>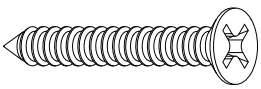<br>M4 x 38mm | | | |

# 1

| | | | | | |
|---|---|---|---|---|---|
| 15 |  | 1 pc | 1 | 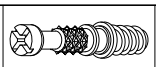 | 18 pcs |
| 16 | 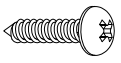 | 1 pc | 3 |  | 28 pcs |
| | | | 7 |  | 1 pc |
| | | | 11 |  | 2 pcs |
| | | | 14 |  | 1 pc |

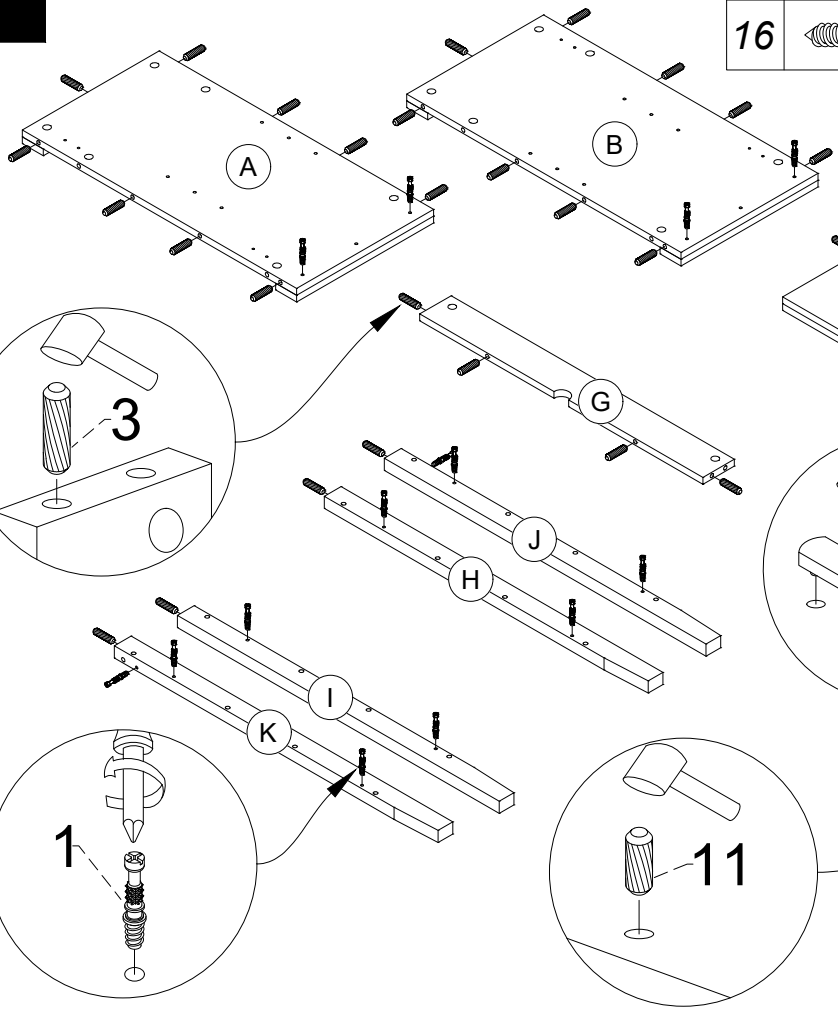


# 2

| | | |
|---|---|---|
| 2 |  | 8 pcs |

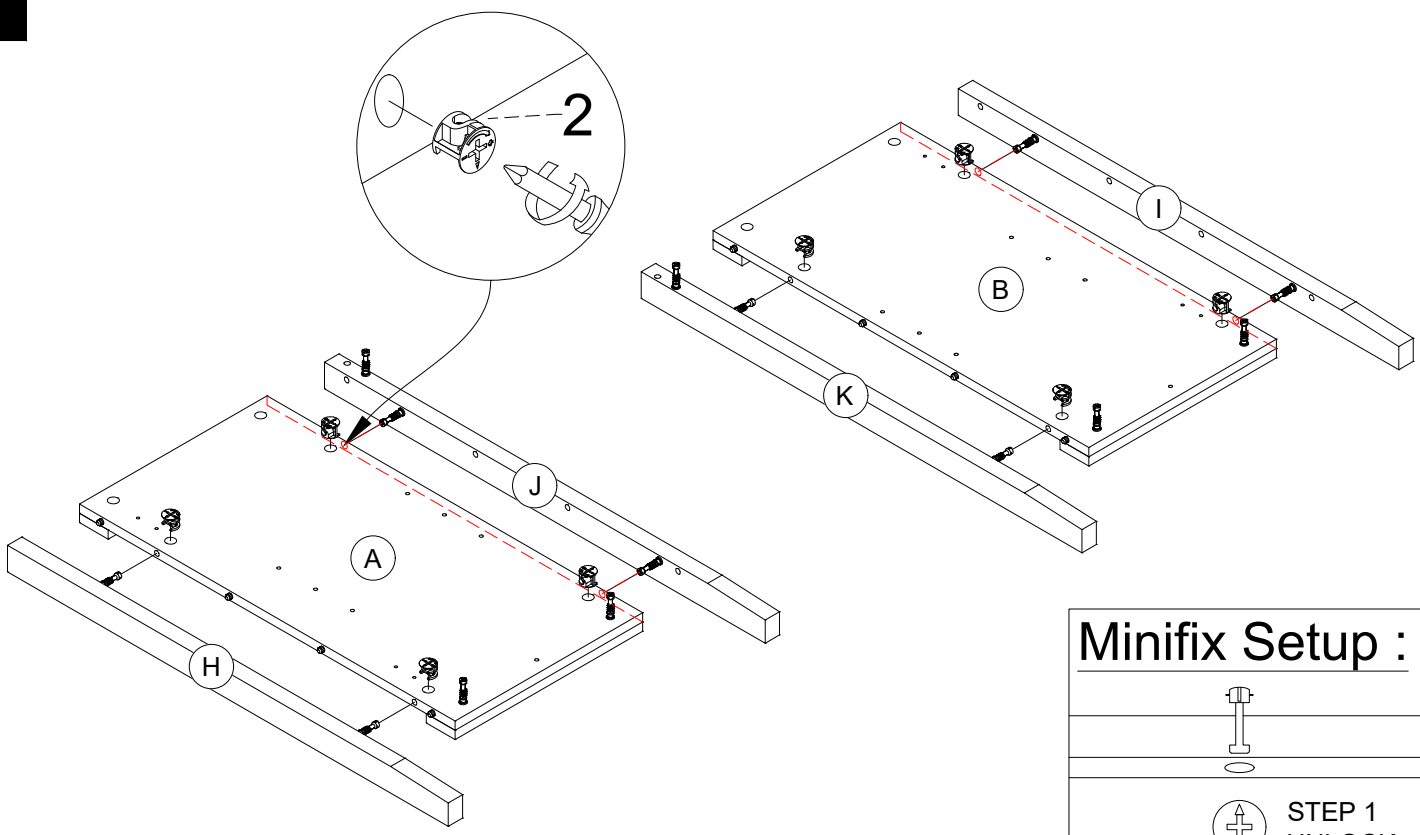


## Minifix Setup :





## 3

| 2 |  | 6 pcs |
|---|---|---|

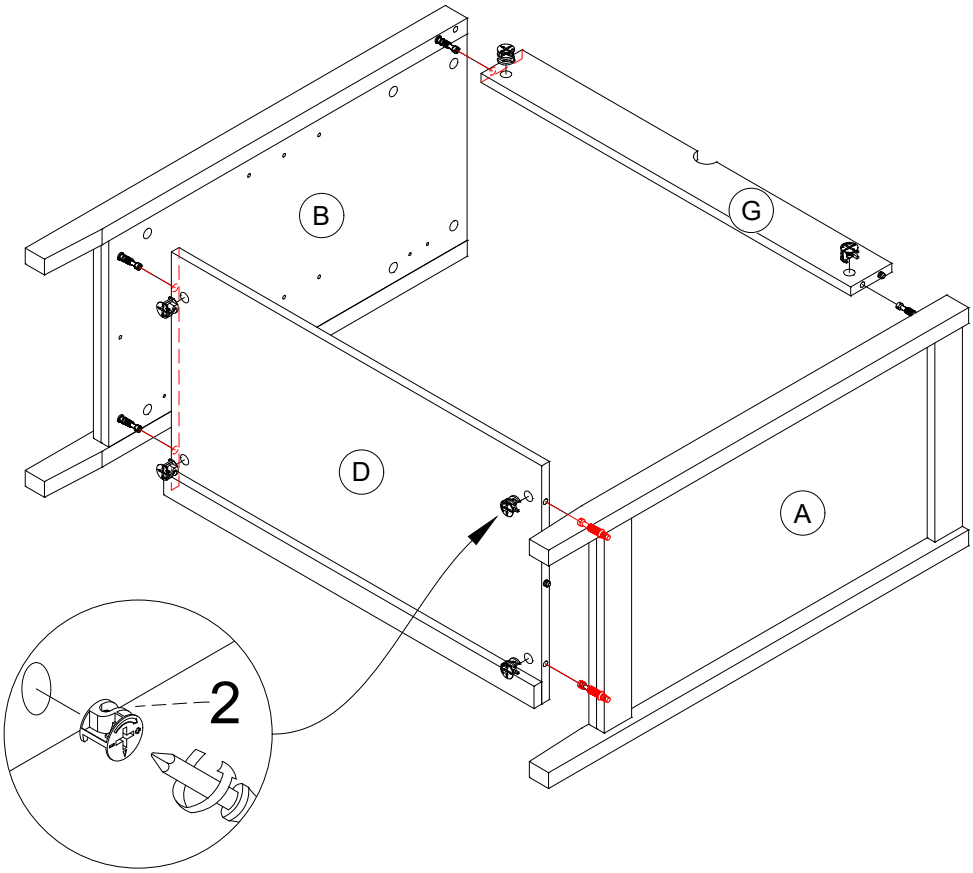


## Minifix Setup :

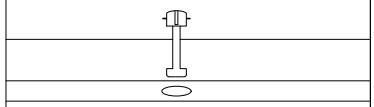

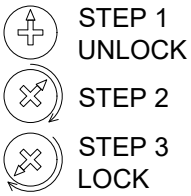


## 4

| 12 |  | 2 pcs |
|---|---|---|

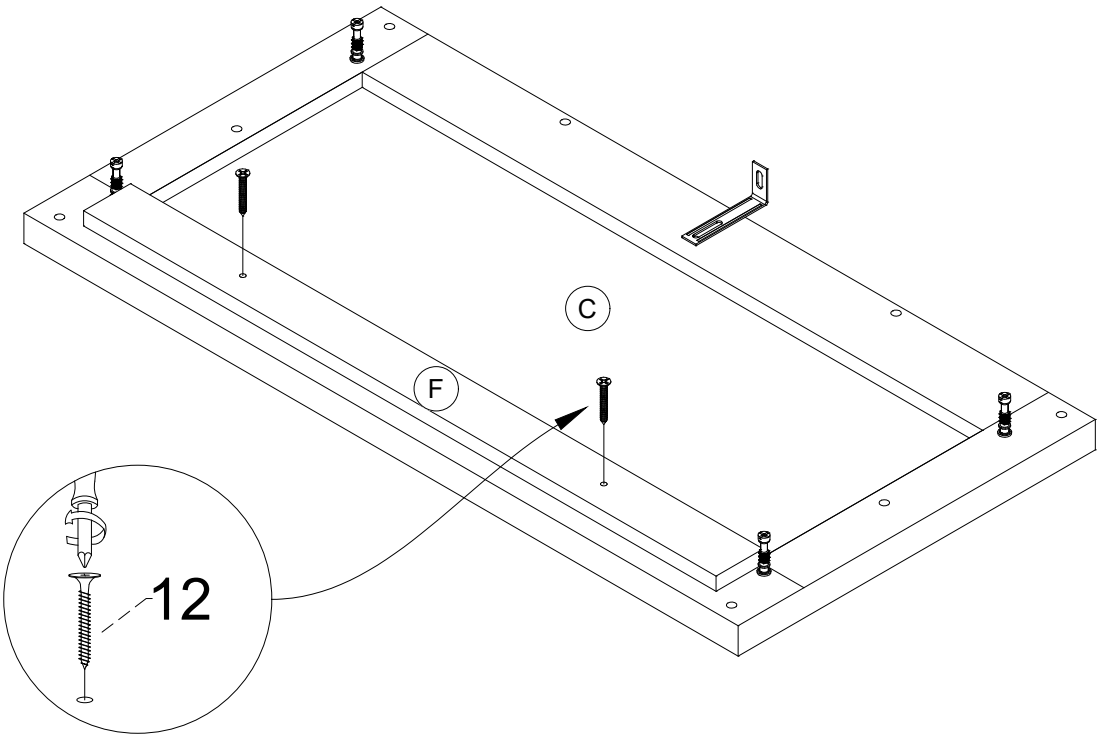

## 5

| | | |
|---|---|---|
| 2 |  | 4 pcs |

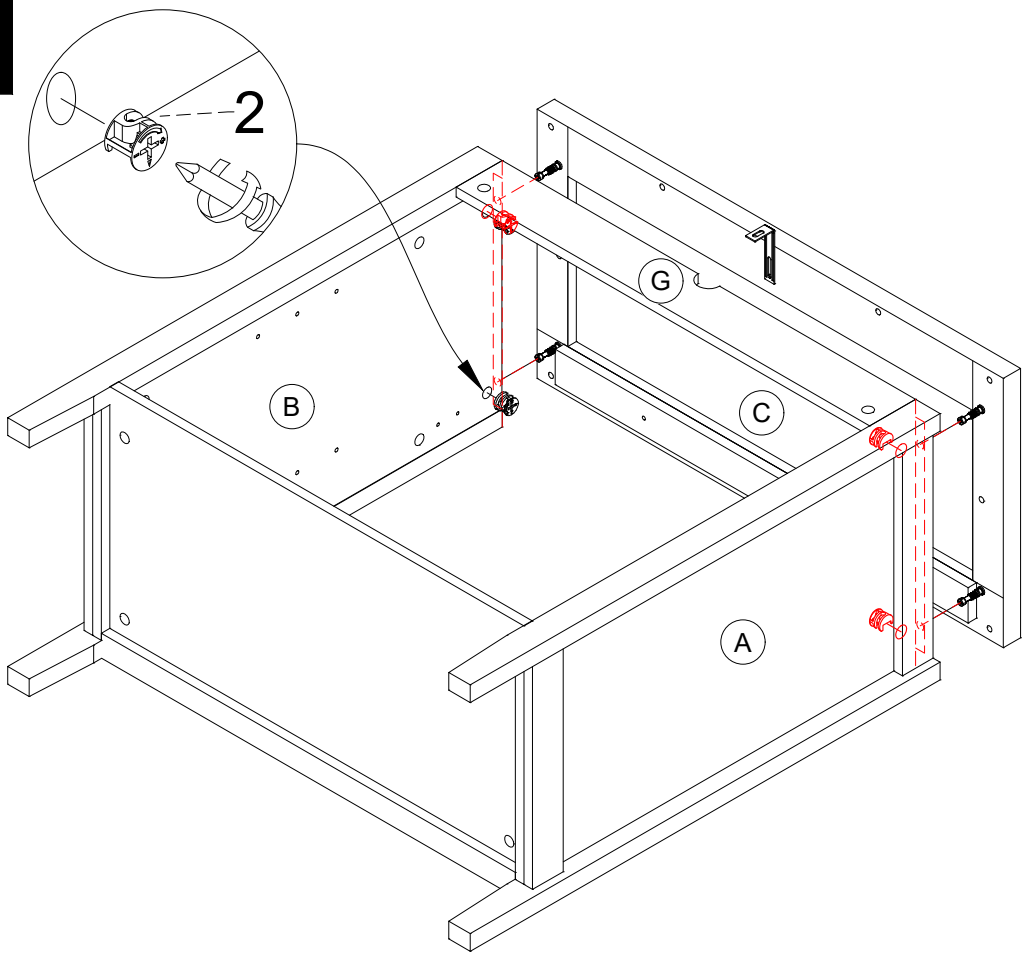


## Minifix Setup :

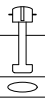

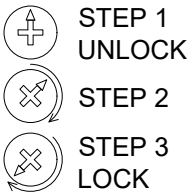


## 6

| | | |
|---|---|---|
| 6 |  | 11 pcs |
| 4 |  | 4 pcs |

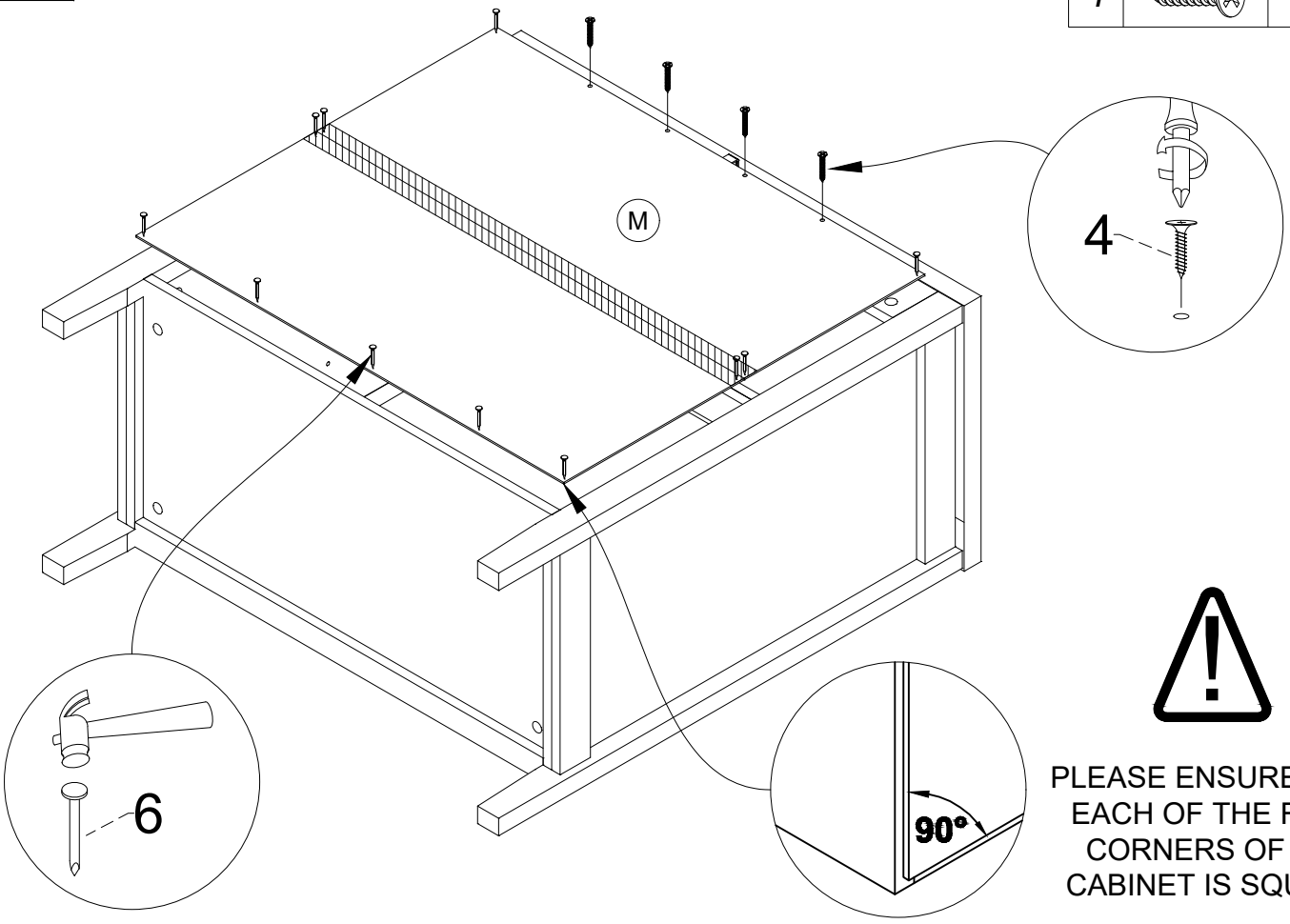


PLEASE ENSURE THAT EACH OF THE FOUR CORNERS OF THE CABINET IS SQUARE.

## 7

| | | |
|---|---|---|
| 10 |  | 4 pcs |

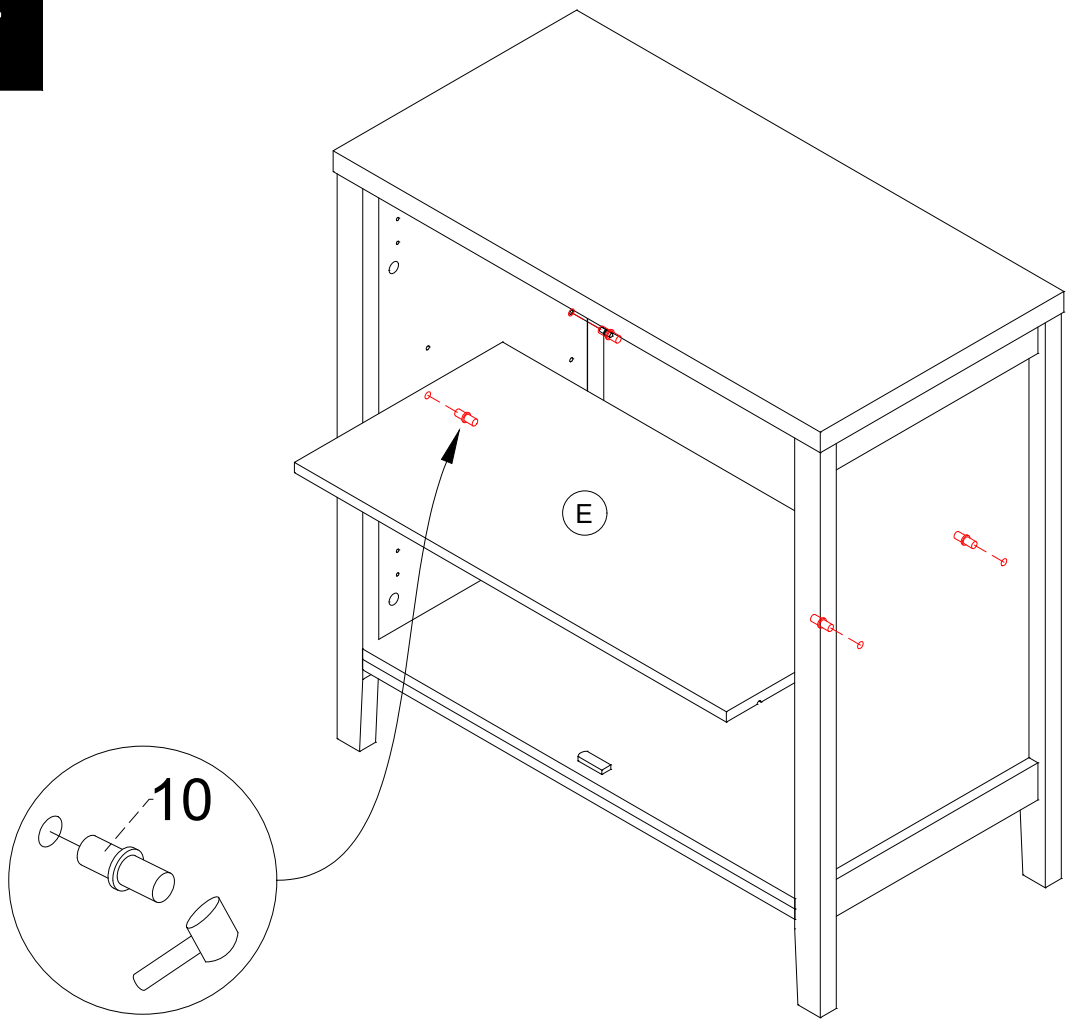


## 8

PLEASE PUT ANOTHER
BOARD IN ORDER TO ALIGN
THE HINGES ACCORDINGLY.

| | | |
|---|---|---|
| 5 |  | 4 pcs |
| 13 |  | 8 pcs |

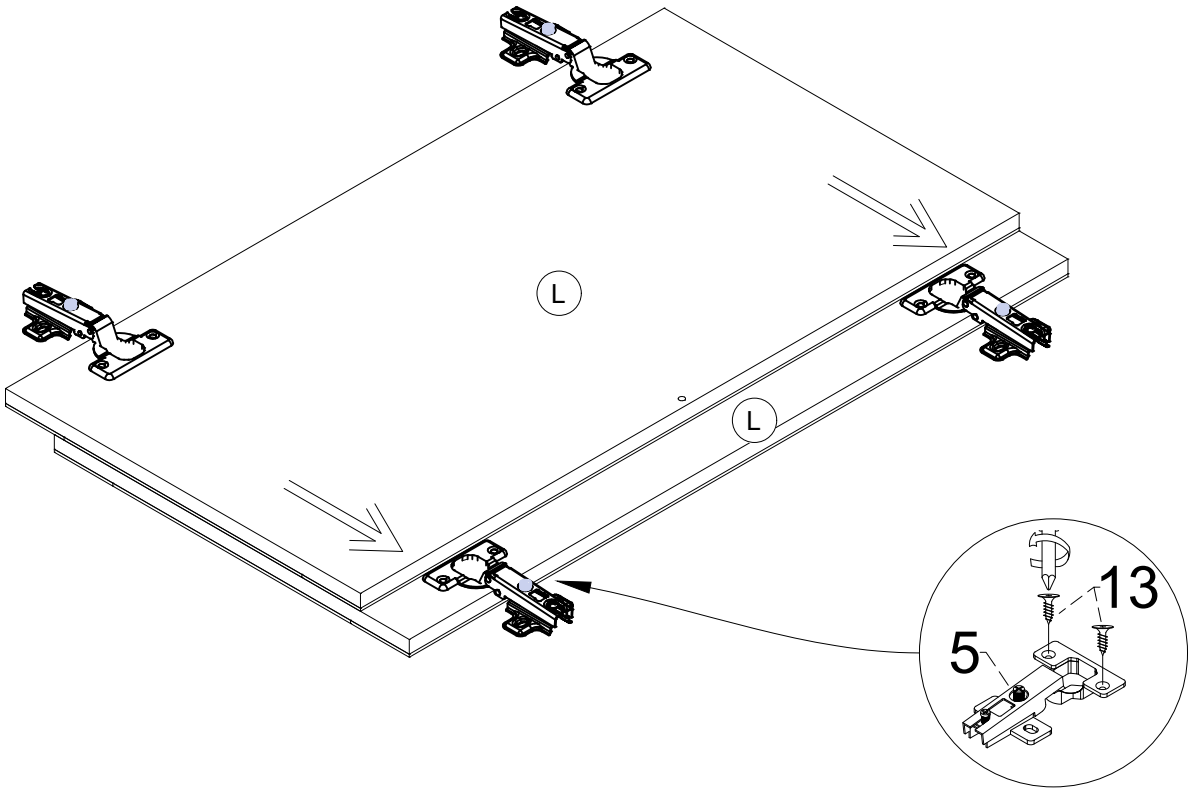

## 9

| | | |
|---|---|---|
| 8 |  | 2 pcs |
| 9 |  | 2 pcs |
| 13 |  | 8 pcs |

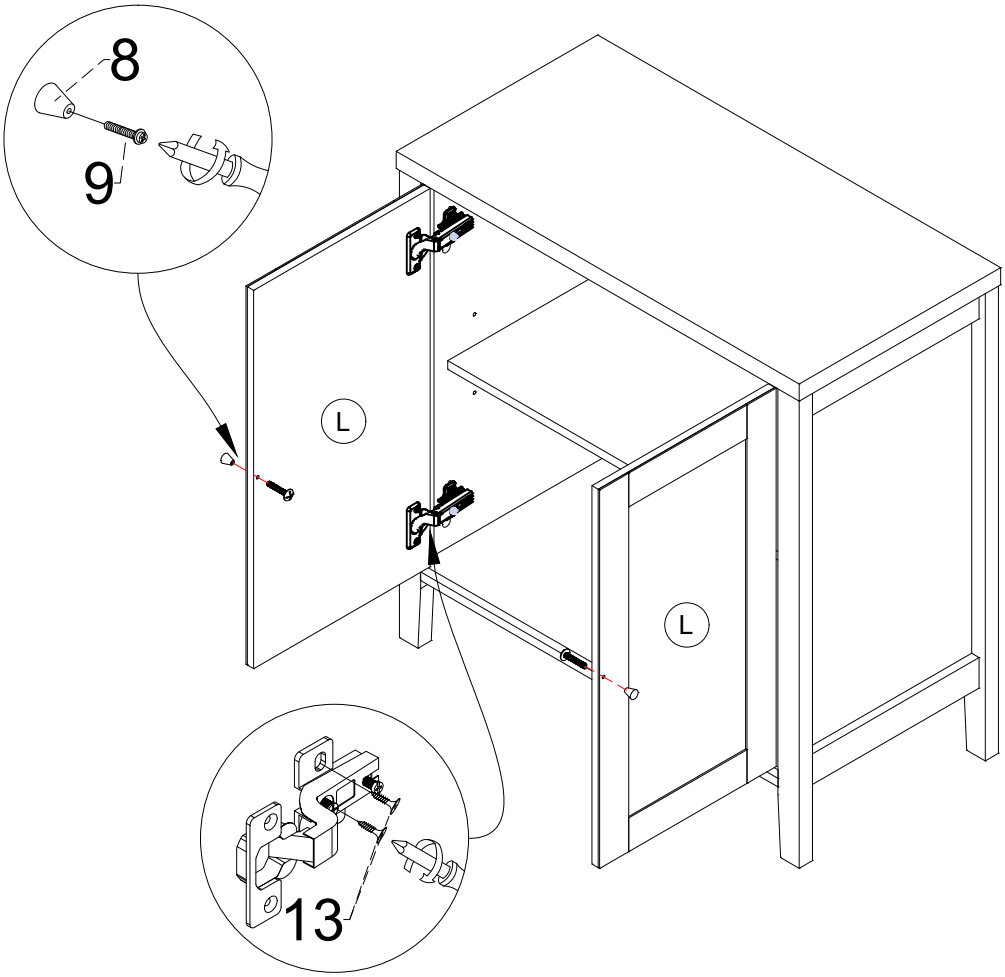


## 10

| | | |
|---|---|---|
| 17 |  | 1 pc |

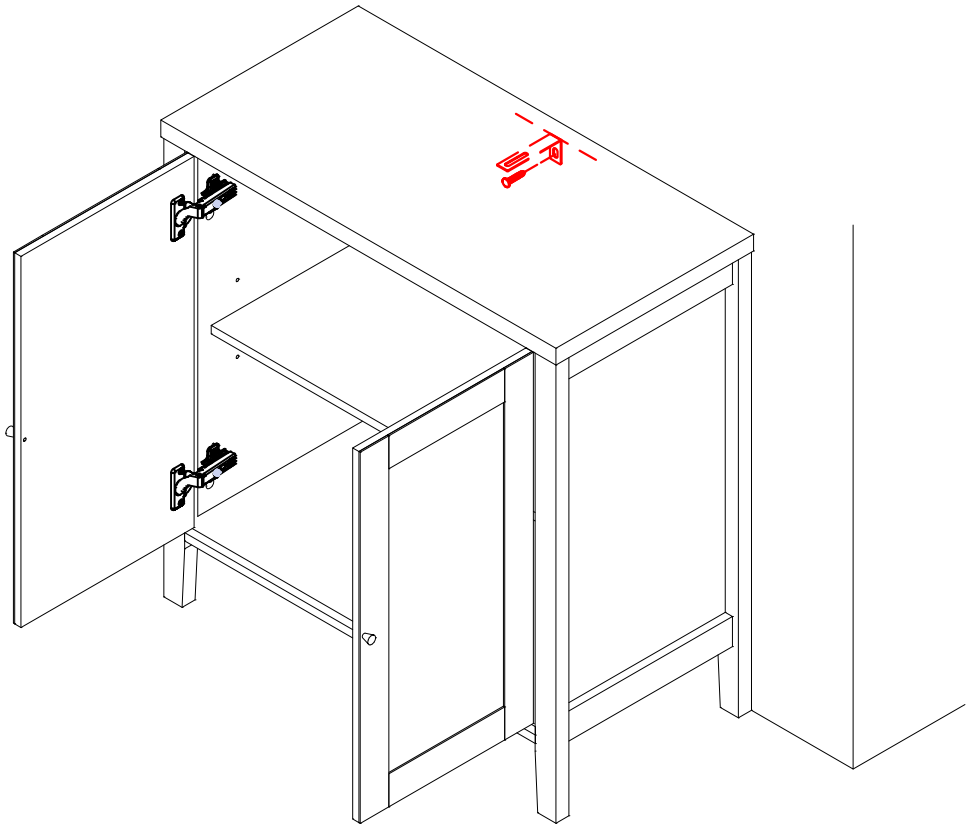

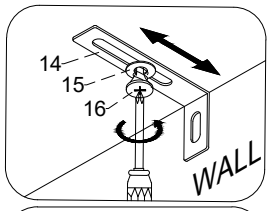


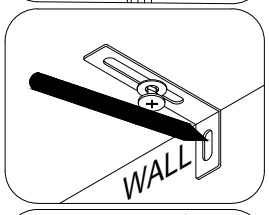


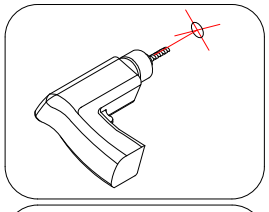

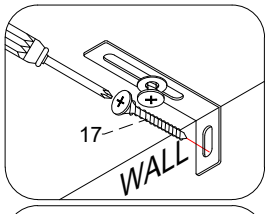


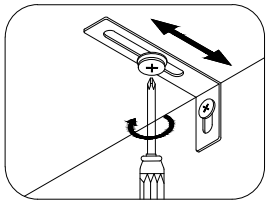

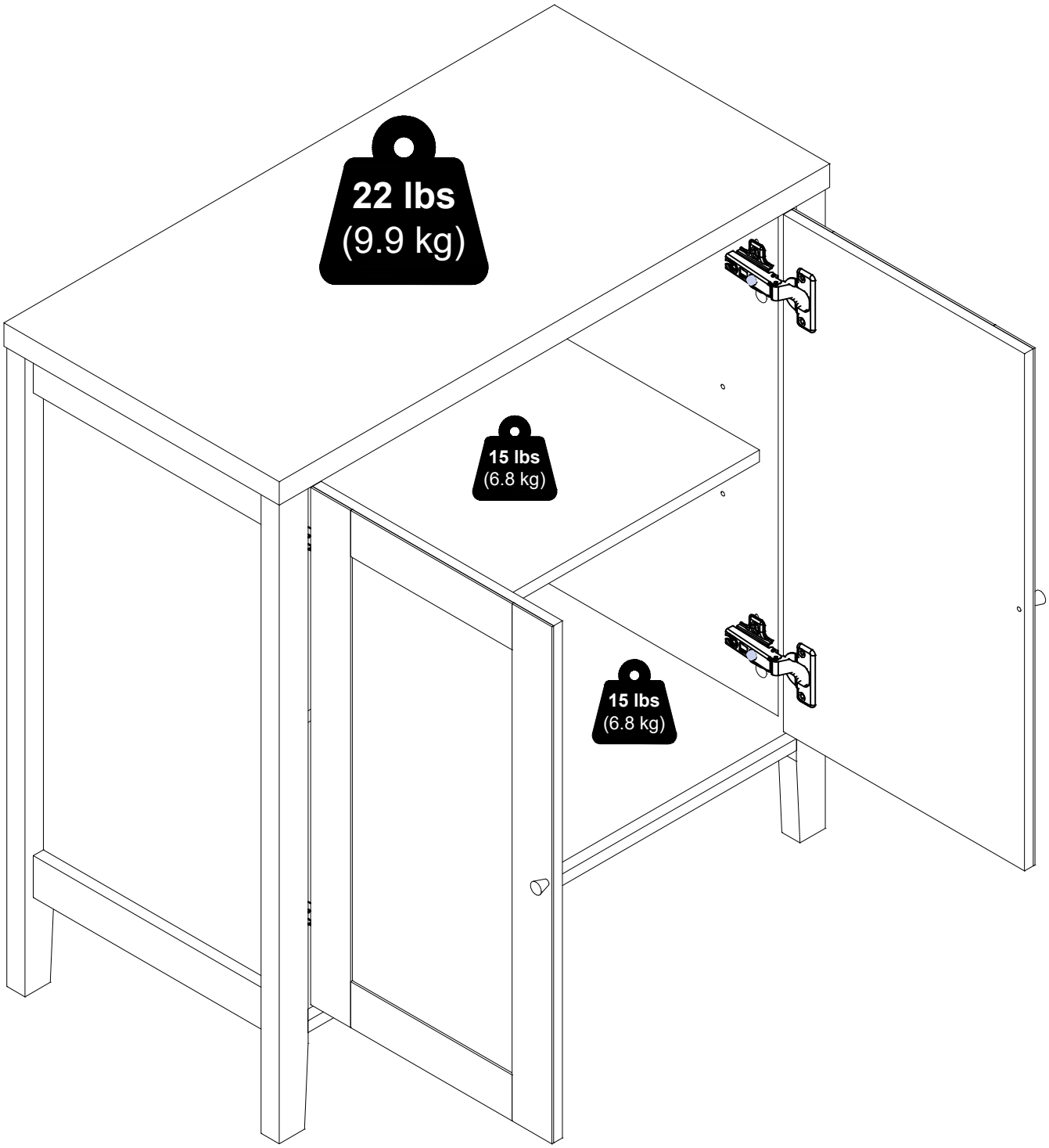
22 lbs
(9.9 kg)
15 lbs
(6.8 kg)
15 lbs
(6.8 kg)