STEP 4

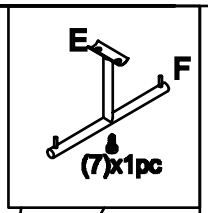

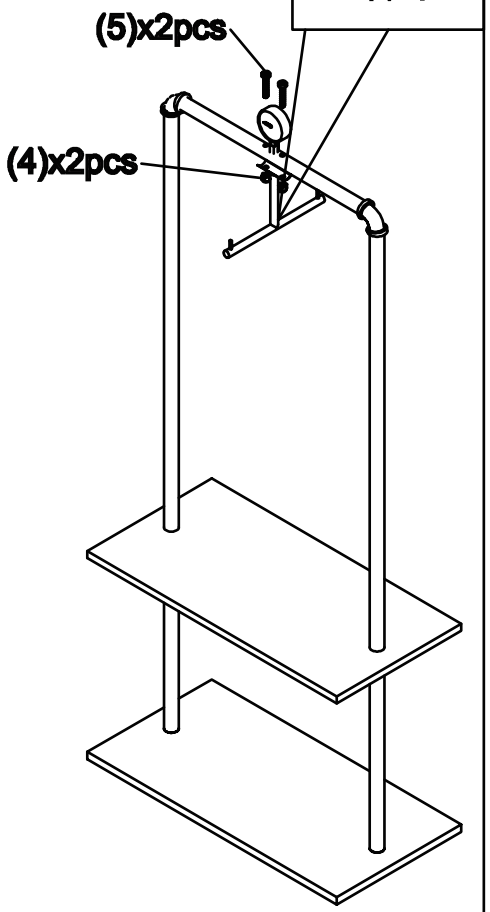

Recommended Maximum Weight

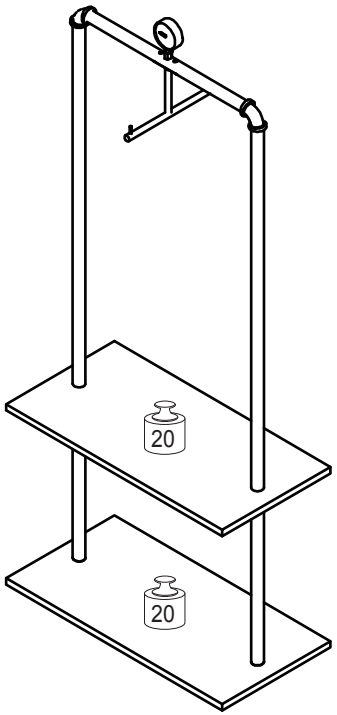

*Unit in Pound(lbs)

WARNING:

>This unit has been designed to support the maximum loads shown. Exceeding these load limits could cause sagging, instability, product collapse, and/or serious injury.

>DO NOT allow children to climb on unit.

>Put heavier items on lower shelves.

Furinno®
Fits Space. Fits Budget

Assembly Instruction

Furinno Garment Rack with Wood Shelves

MODEL : **FIND03**

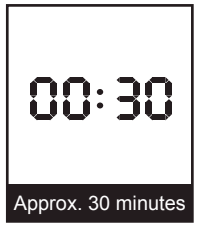

Approx. 30 minutes


Recomm. 1 Person

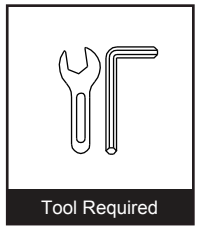
Tool Required

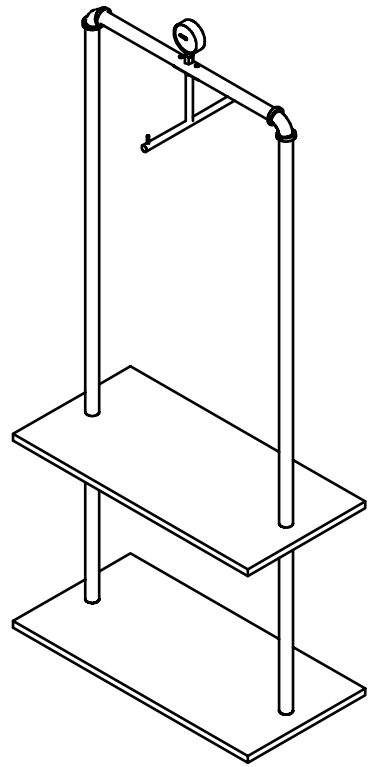

Customer Support

NEED HELP? For replacement requests or product inquiries, please contact our Customer Service Team by emailing us at **support@furinno.com**. Thank you for selecting Furinno!

www.furinno.com

No	Hardware List	Qty
1		4pcs
2		6pcs
3		2pcs
4		2pcs
5		2pcs
6		2pcs
7		1pc
8		2pcs

No	Parts List	Qty
A	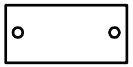	1pc
B	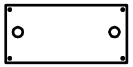	1pc
C		1pc
D		2pcs
E		1pc
F		1pc
G		1pc

STEP 1

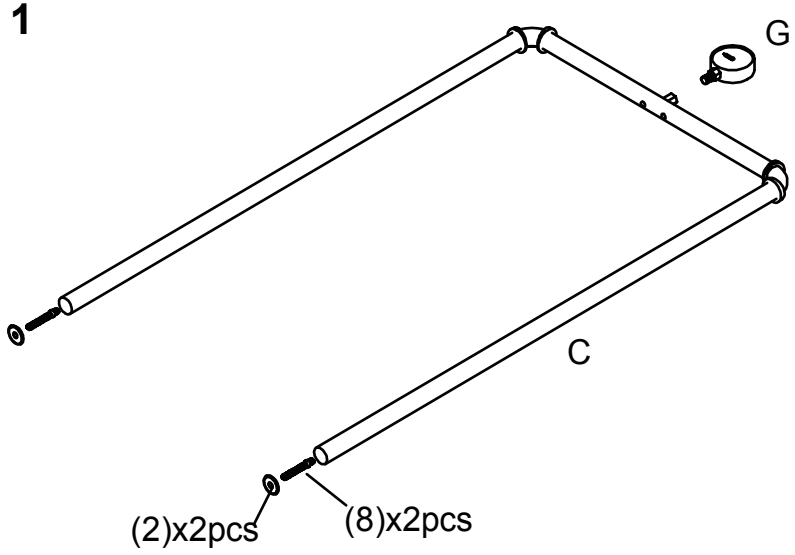

STEP 2

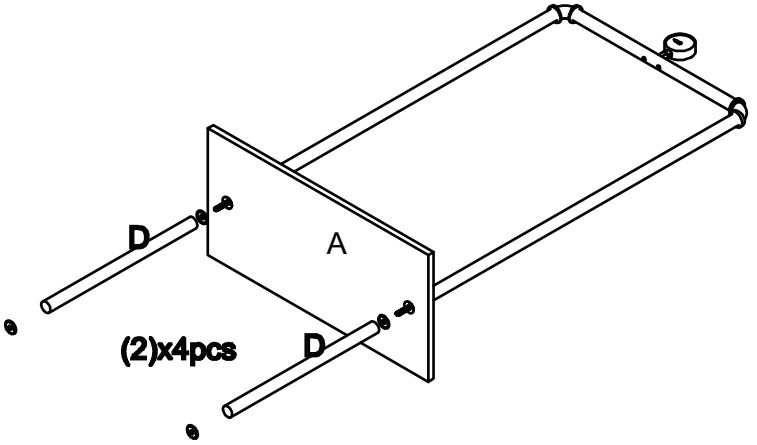

STEP 3

