Furinno®
Fits Space. Fits Budget

www.furinno.com

NEED HELP? For replacement requests or product inquiries, please contact our Customer Service Team by emailing us at **support@furinno.com**. Thank you for selecting Furinno!

FL-600

Furinno Indo 3-Tier TV Stand with Casters

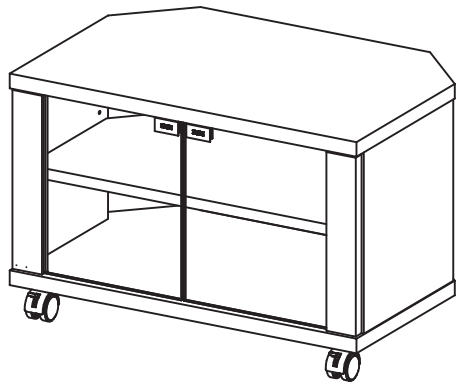

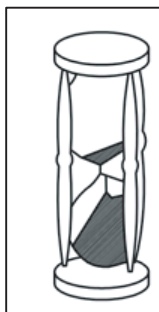

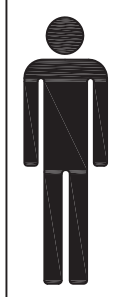

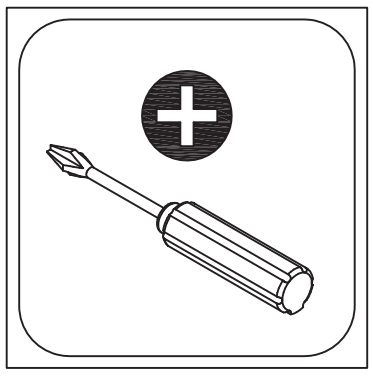

USEFUL HINTS BEFORE YOU START:

1. Read each step carefully before starting.
2. It is important that each step is performed in correct order to avoid difficulties.
3. Identify, sort and count the parts before assembly.
4. Assemble your furniture on packaging cardboard to prevent scratch or damage.
5. Clean the product with mild cleanser using soft damped cloth.
   Do not use harsh or abrasive cleanser.
6. Using uncompatible hardware might cause damage to product.

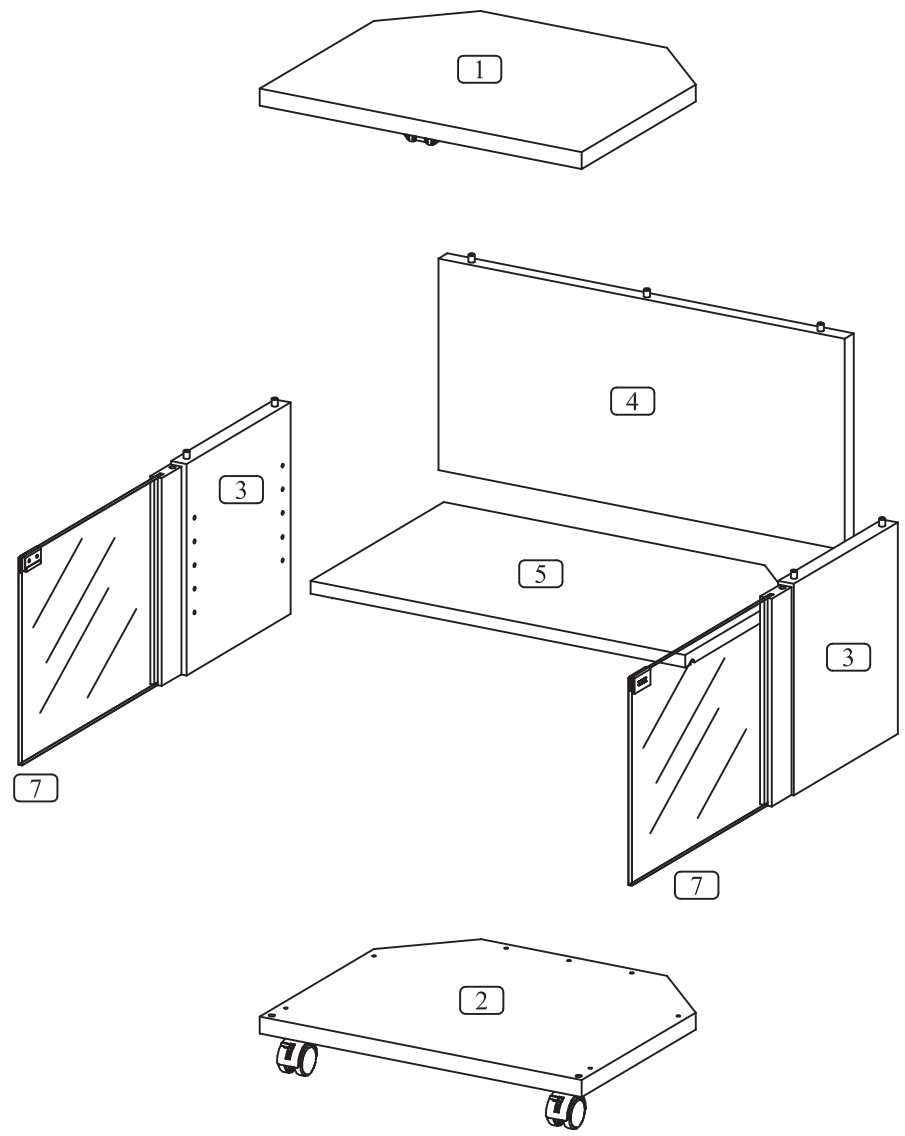

A 7 x 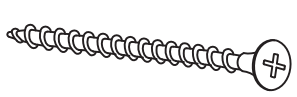 ø8x45 mm	B 1 x 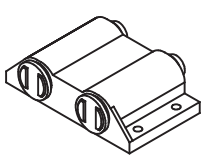 58x45x17 mm	C 4 x  ø6x5/8" RH	D 16 x  ø6x5/8" FH	E 2 x 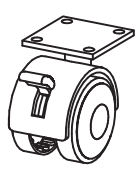 ø38x60x58 mm	F 2 x 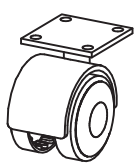 ø38x60x58 mm
G 2 x 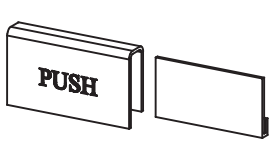 40x25x9 mm	H 2 x 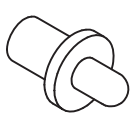 14xø12/ø5 mm	I 2 x  14xø12/ø5 mm	J 1 x  ø25x105 mm	K 4 x 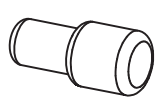 ø4.5xø6.8x15 mm	

1

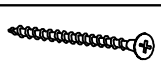

A = 4 x

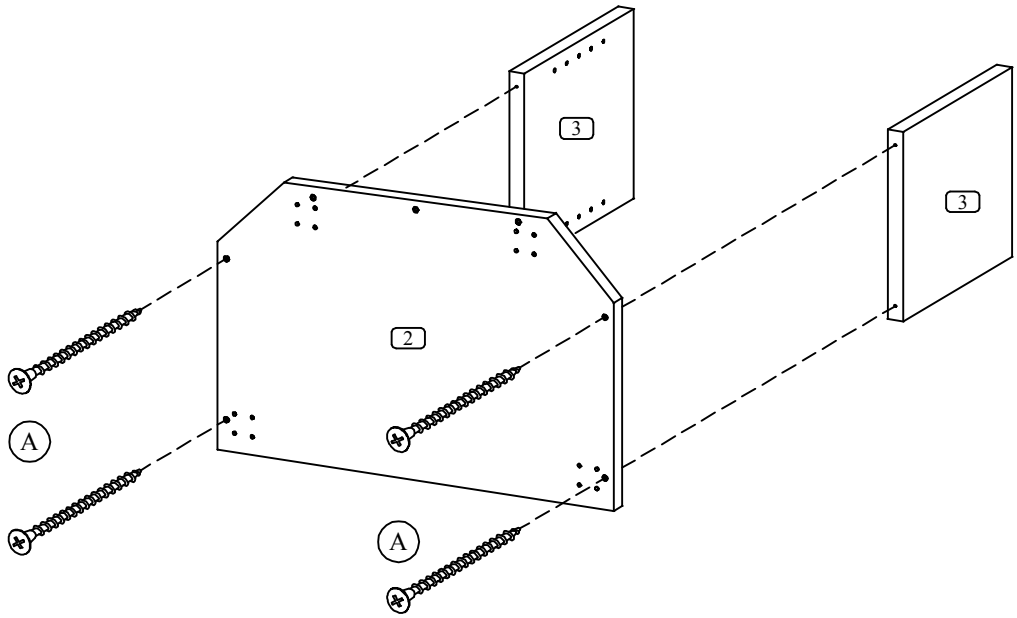

2

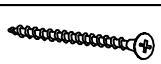

A = 3 x

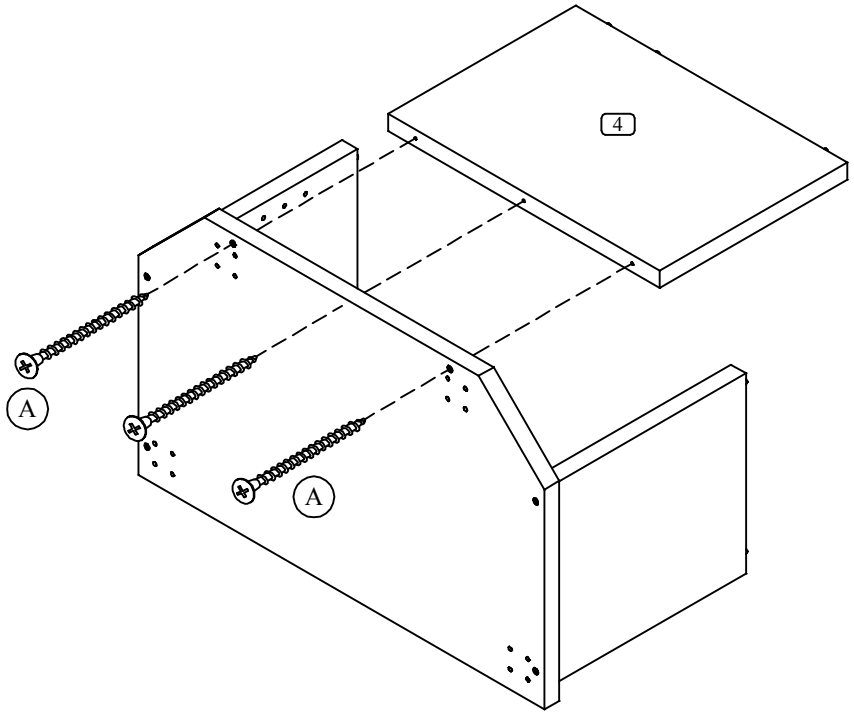

3

D = 16 x

E = 2 x

F = 2 x

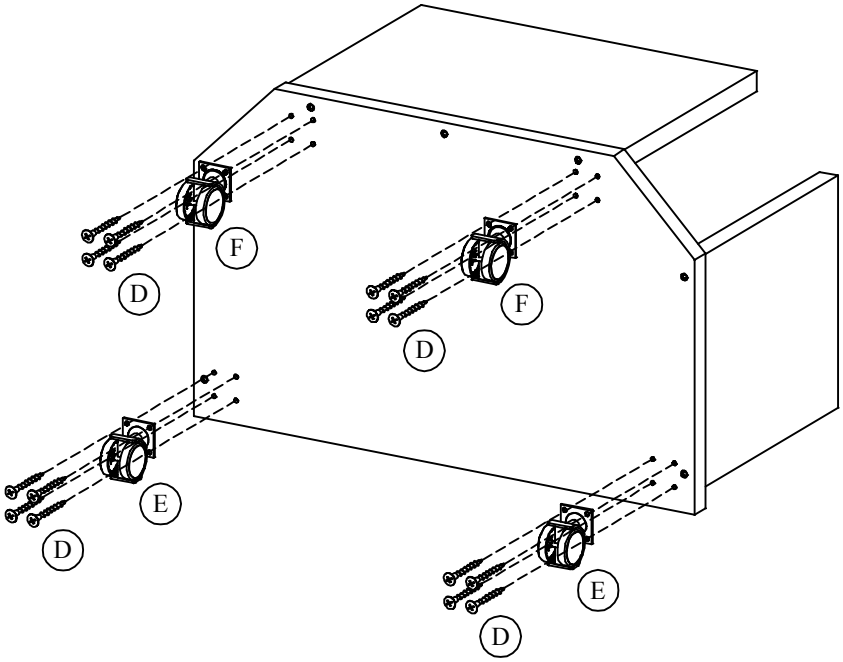

4

B = 1 x

C = 4 x

J

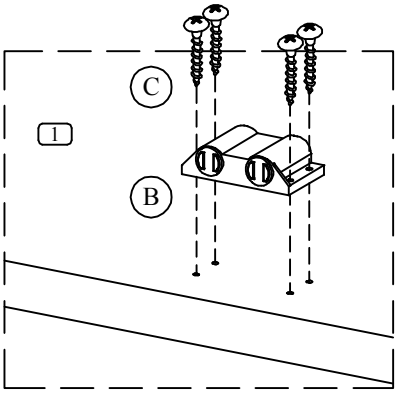

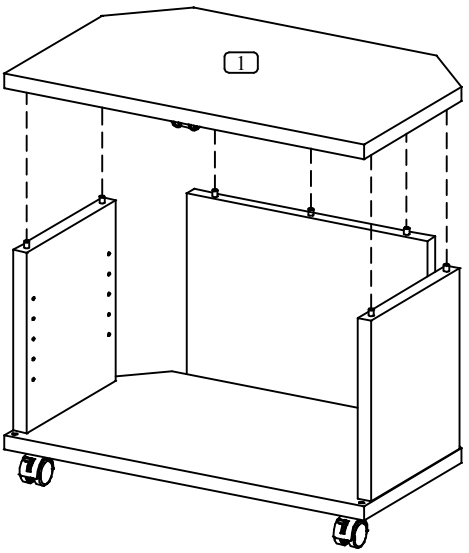

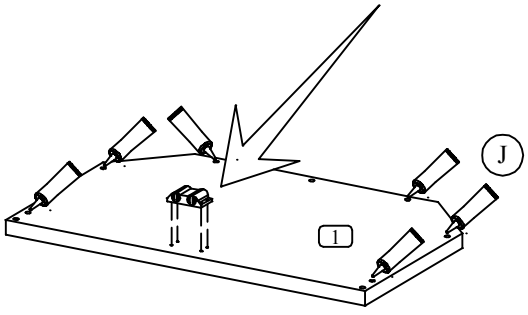

5

K = 4 x

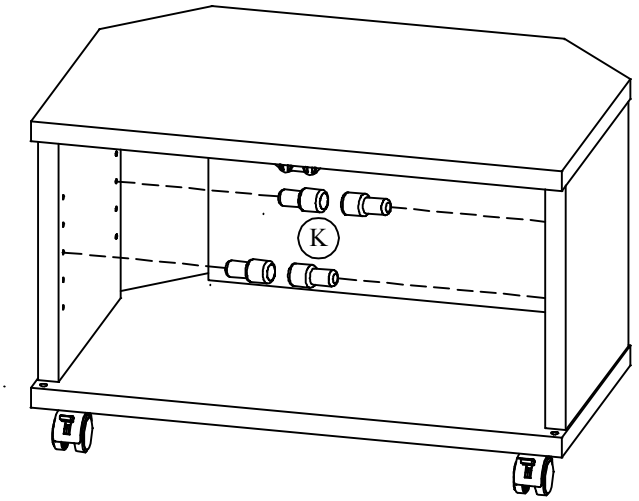

6

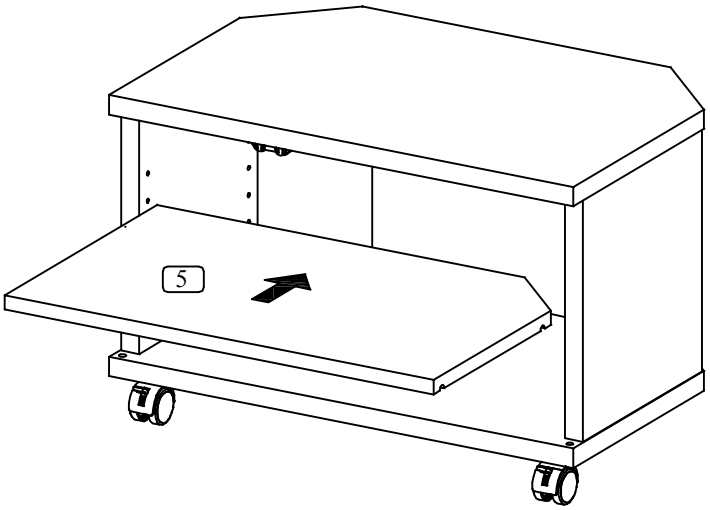

7

G = 2 x	H = 2 x	I = 2 x

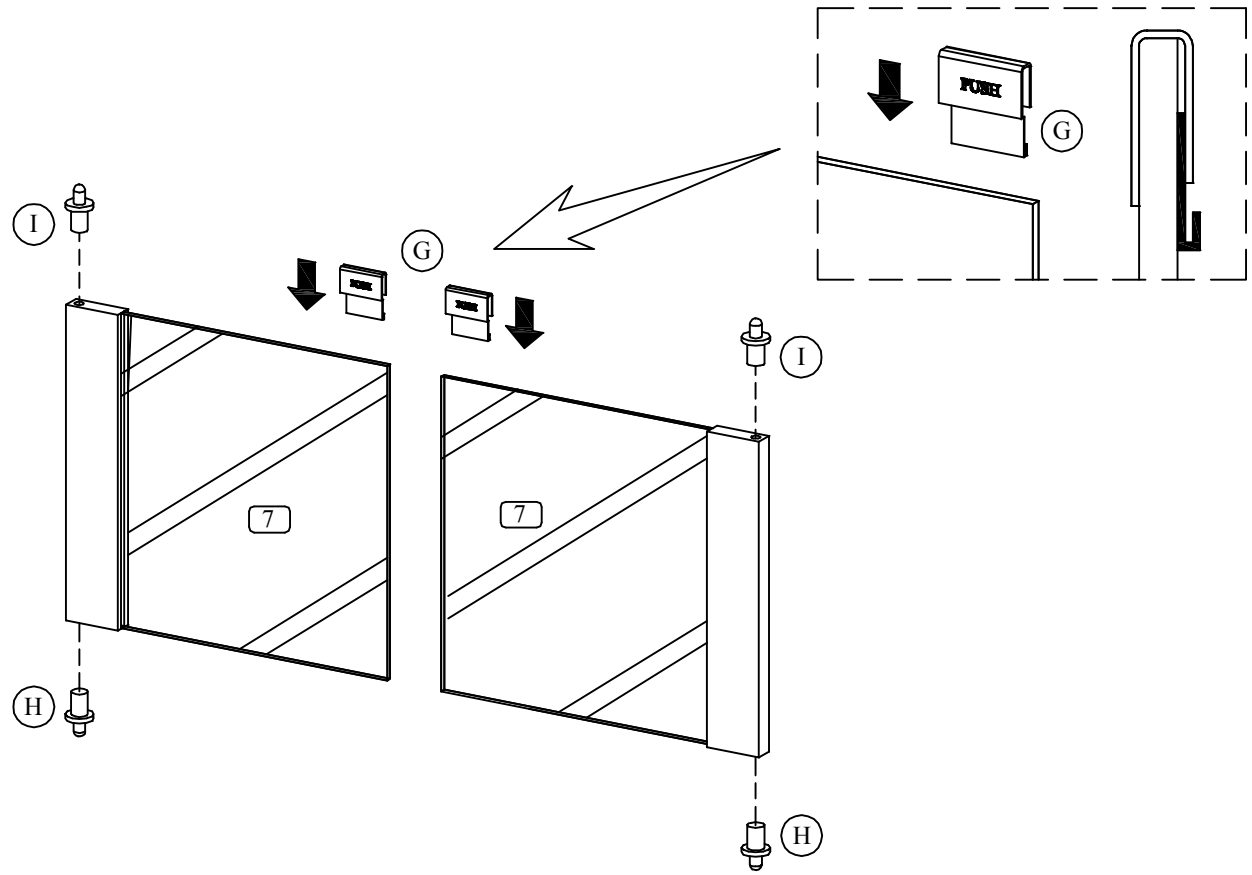

8

