FL-800

Furinno Indo 3-Tier Wide TV Stand with Casters

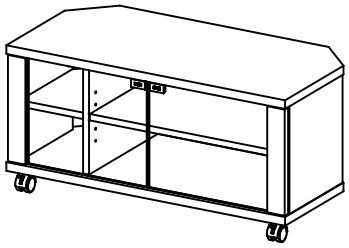

www.furinno.com

NEED HELP? For replacement requests or product inquiries, please contact our Customer Service Team by emailing us at **support@furinno.com**. Thank you for selecting Furinno!

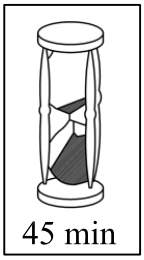

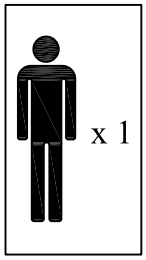

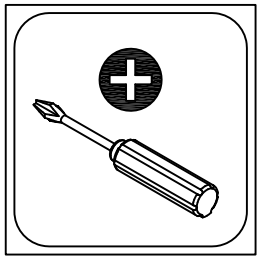

USEFUL HINTS BEFORE YOU START:

1. Read each step carefully before starting.
2. It is important that each step is performed in correct order to avoid difficulties.
3. Identify, sort and count the parts before assembly.
4. Assemble your furniture on packaging cardboard to prevent scratch or damage.
5. Clean the product with mild cleanser using soft damped cloth.
   Do not use harsh or abrasive cleanser.
6. Using uncompatible hardware might cause damage to product.

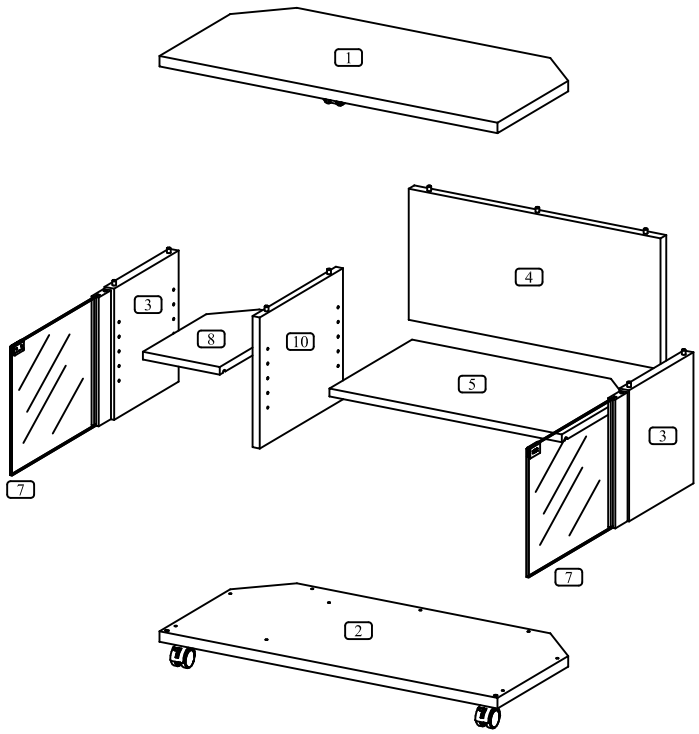

A 9 x	B 1 x	C 4 x	D 16 x	E 2 x	F 2 x
	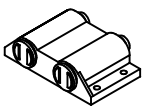	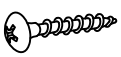	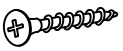		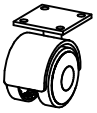
ø8x45 mm	58x45x17 mm	ø6x5/8" RH	ø6x5/8" FH	ø38x60x58 mm	ø38x60x58 mm

G 2 x	H 2 x	I 2 x	J 1 x	K 8 x
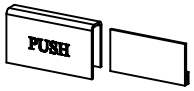			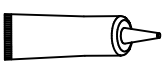	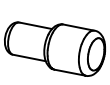
40x25x9 mm	14xø12/ø5 mm	14xø12/ø5 mm	ø25x175 mm	ø4.5xø6.8x15 mm

1

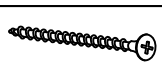

A = 6 x

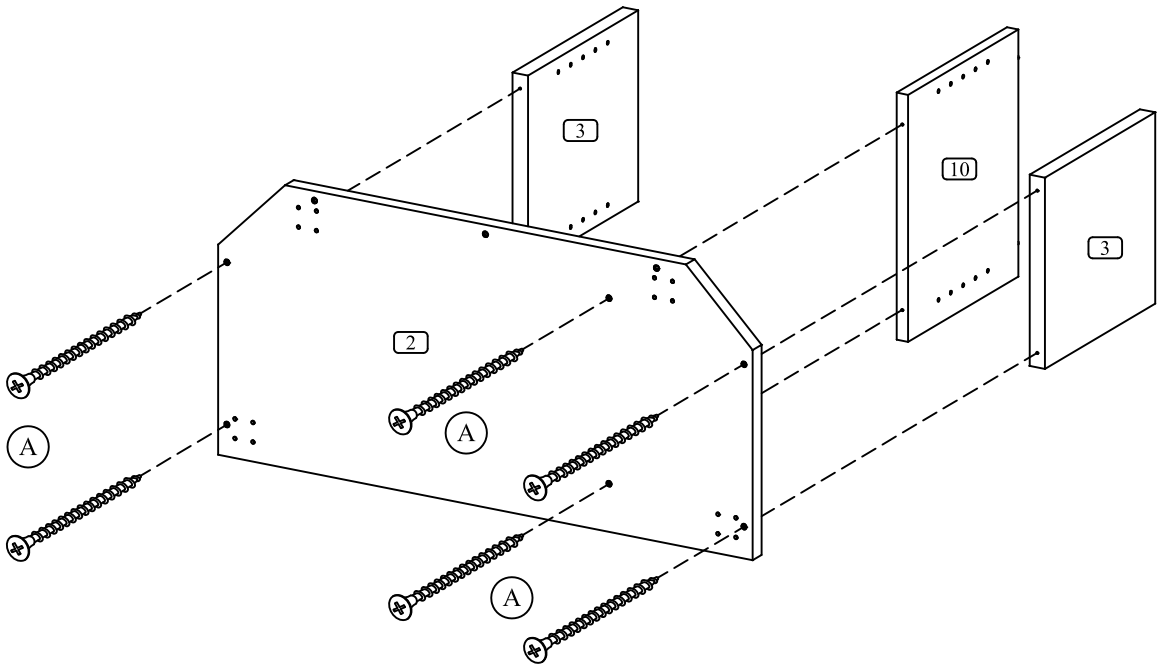

2

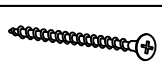

A = 3 x

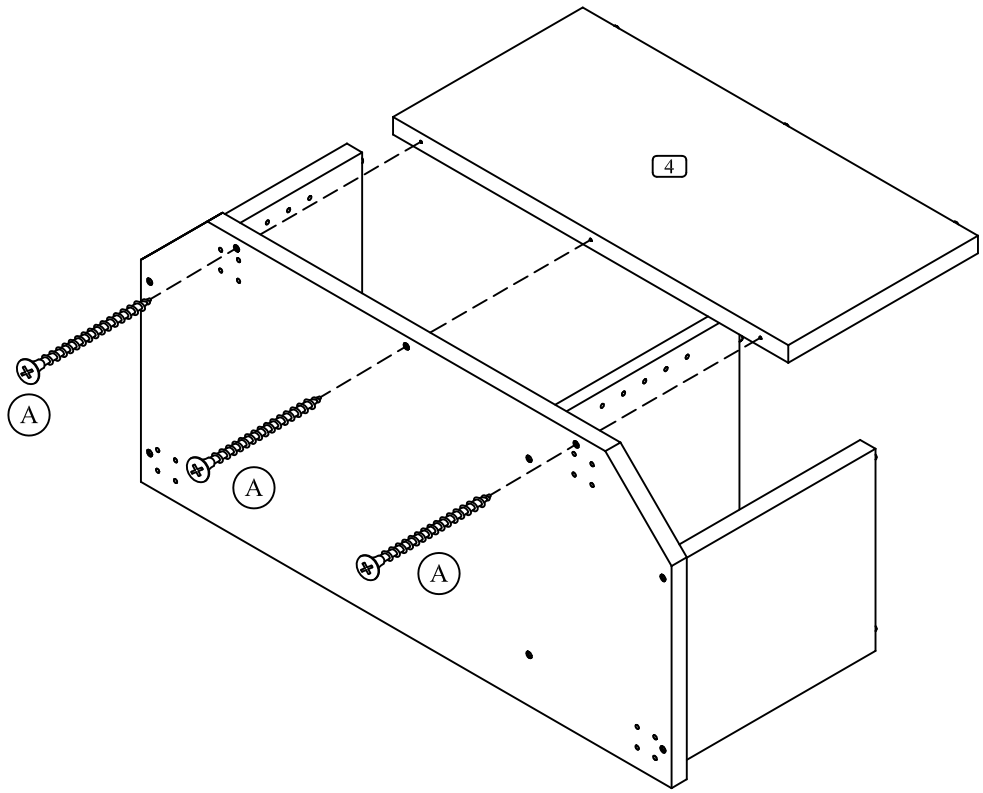

3

D = 16 x	E = 2 x	F = 2 x

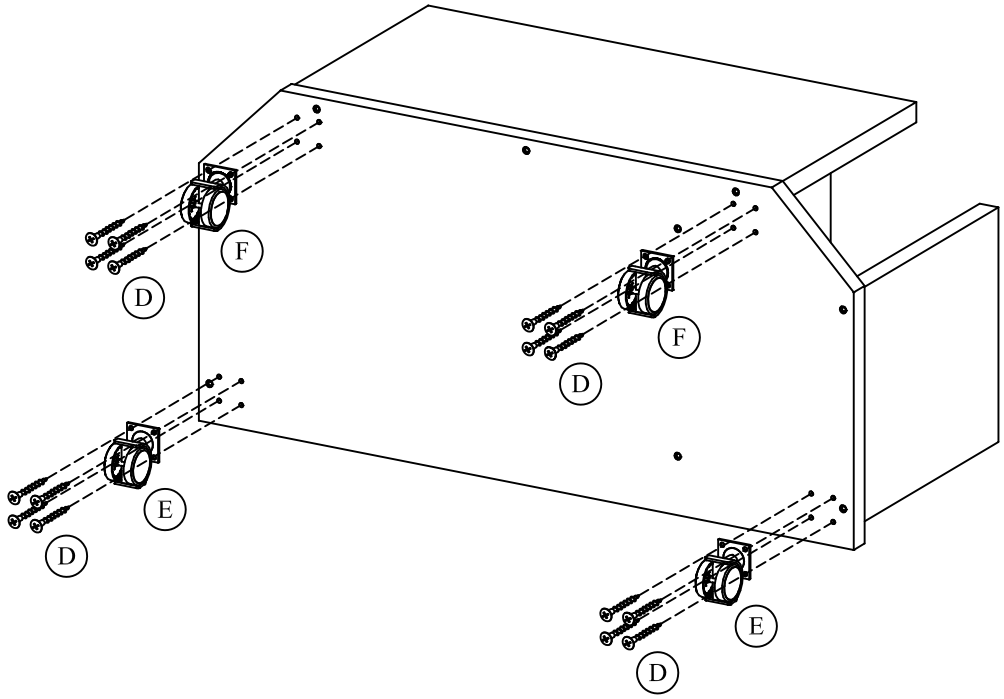

4

B = 1 x	C = 4 x	J

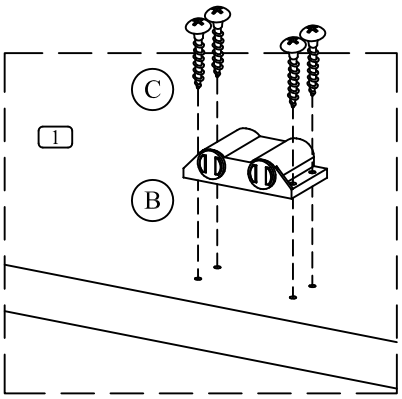

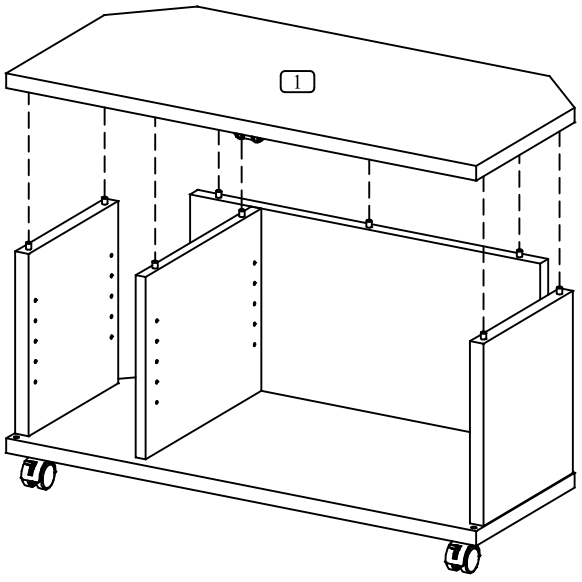

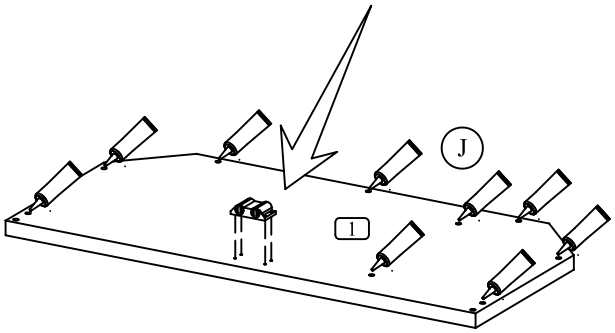

5

K = 8 x

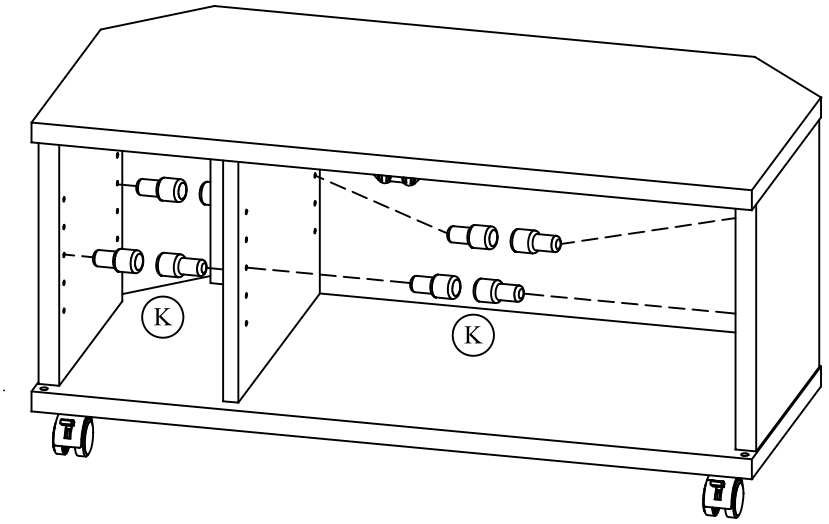

6

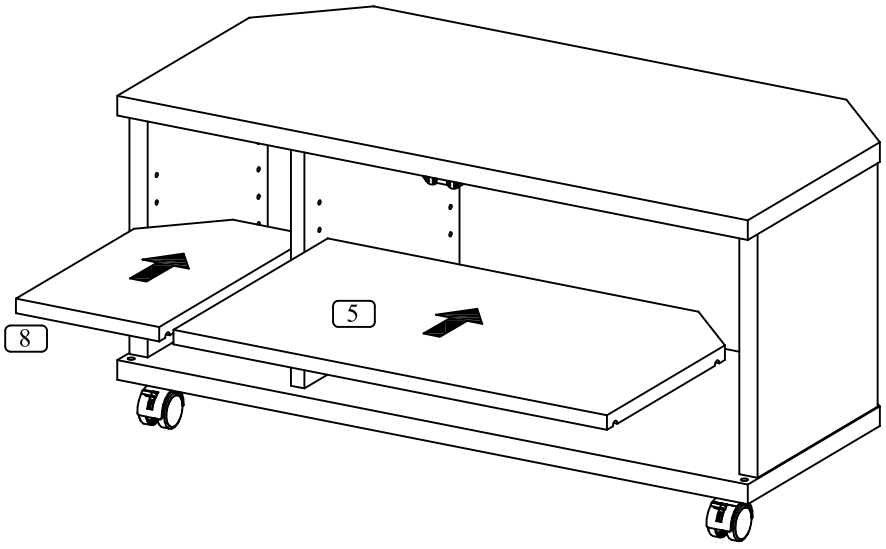

7

G = 2 x	H = 2 x	I = 2 x

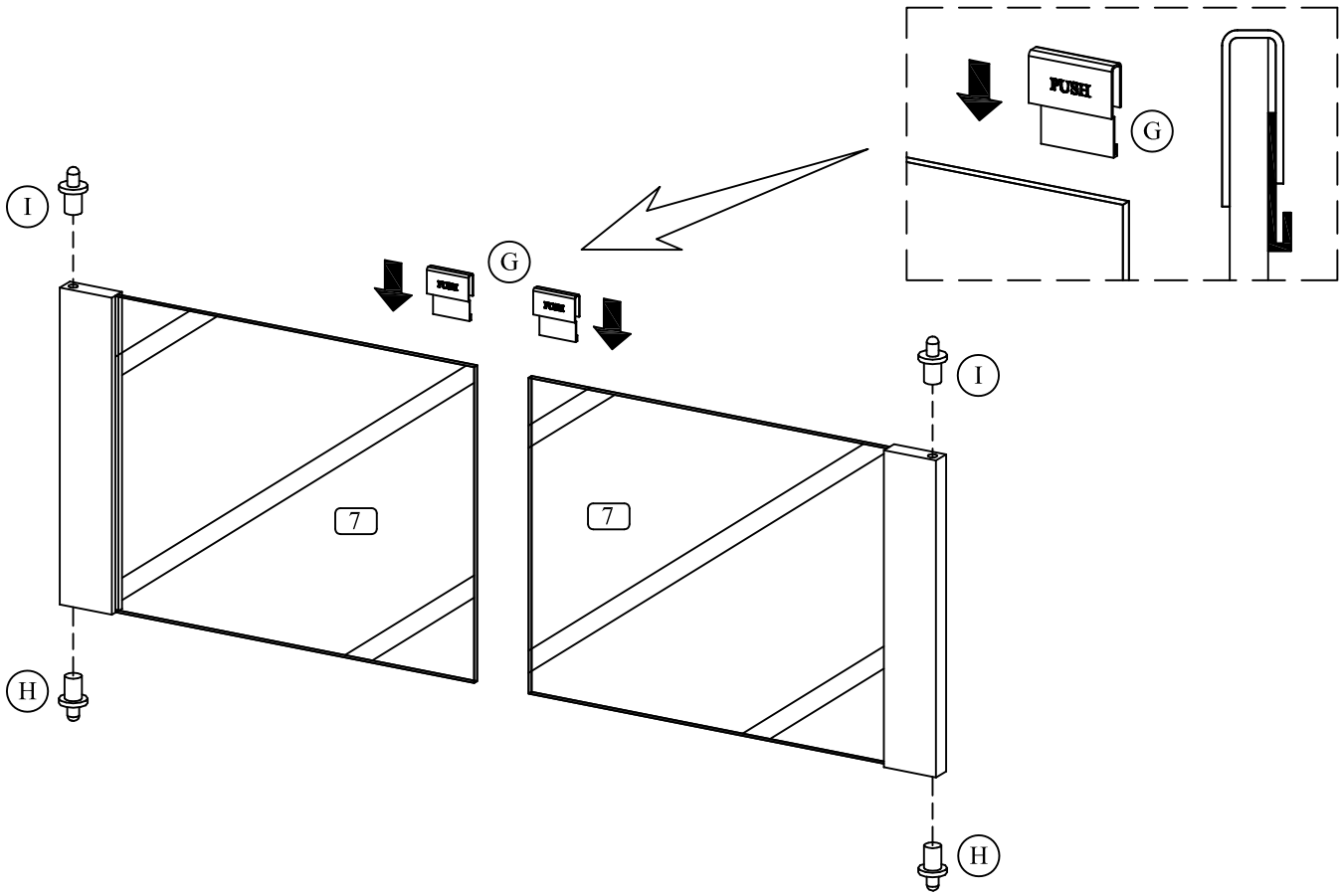

8

